Quick Select Product Guide

For Electrical Explosion Protection Equipment

Your automation, our passion.

PEPPERL+FUCHS

Contents: Products

Product Series	Material (Gas Group)	Page
Terminal and Junction Boxes (Ex e, Ex i, Ex op)		**4**
Terminal Boxes (GR.T*)	Glass Fiber Reinforced Polyester	6
Terminal Boxes (SR.T*)	Stainless Steel	8
Standard Variants Junction Boxes (GR.TJ* / SR.TJ*)	GRP or Stainless Steel	10
Terminal Boxes (EA/DA*)	Aluminum	12
FO Splice Boxes (SR.TFO.*)	Stainless Steel	14
FO Splice Boxes (GR.TFO.*)	Glass Fiber Reinforced Polyester	16
Terminal and Junction Boxes (Ex d)		**18**
Terminal Boxes (EJB*.T)	Aluminum or Stainless Steel (Ex d IIB+H_2)	20
Terminal Boxes (GUB*.T)	Aluminum or Stainless Steel (Ex d IIC)	21
Terminal Boxes (F* TB)	Aluminum (Ex d IIB or IIC)	22
Control Units (Ex e)		**24**
Control Units (LRP)	Polyamide	26
Standard Variants (LRP)	Polyamide	28
Control Units (LRS)	Stainless Steel	30
Standard Variants (LRS)	Stainless Steel	32
Operating Elements (CFP)	Polyamide	34
Panel Mount Control Units (PM*.*.*)	Polyamide	50

Product Series	Material (Gas Group)	Page
Control Units (Ex d)		**54**
Contol Units (FW*LCU)	Aluminum (Ex d IIB)	56
Control Units (FC* LCU)	Aluminum (Ex d IIC)	58
Control Stations (Ex e)		**62**
Control Stations (GR.CS*)	Glass Fiber Reinforced Polyester	64
Control Stations (SR.CS*)	Stainless Steel	66
Control and Interface Cabinets (DS*)	Stainless Steel	68
Control Stations (Ex d)		**70**
Control Stations (EJB*.CS)	Aluminum or Stainless Steel (Ex d IIB+H2)	72
Control and Distribution Panels (Ex d)		**74**
Control Panels (EJB*)	Aluminum (Ex d IIB+H_2)	76
Control Panels (EJBX*)	Stainless Steel (Ex d IIB+H_2)	78
Control Panels (FH*)	Aluminum (Ex d IIB+H_2)	81
Control Panels (GUB*)	Aluminum (Ex d IIC)	83
Control Panels (GUBX*)	Stainless Steel (Ex d IIC)	86
Flanged Panel Solutions (Ex de)		**88**
Flanged Panels (FP.*.FS*)	Aluminum/Stainless Steel	90
Switch Disconnectors and Safety Switches (Ex e)		**96**
Switch Disconnectors/Safety Switches (DIS.*/SAF.*)		98
Switch Disconnectors and Motor Starters (Ex d)		**102**
Switch Disconnectors (EJB*.D.PS.DIS.*)	Aluminum (Ex d IIB)	104
Switch Disconnectors (F* SD)	Aluminum	106
Motor Starters (F7-DOL*)	Aluminum (Ex d IIB)	108
Purge and Pressurization Systems (Ex p)		**110**
Purge and Pressurization (Ex p) 5500 Series		112
Purge and Pressurization (Ex p) 6000 Series		114
Purge and Pressurization (Ex p) 6500 Series		116
Purge and Pressurization (Ex p) 7500 Series		118
Cable Glands and Accessories (Ex d, Ex e, Ex i)		**120**
Cable Glands (CG.NA.*)	Metal, for Non-Armored Cables	122
Cable Glands (CG.EM.*)	Metal, for Shielded EMC Cables	125
Cable Glands (CG.AR.*)	Metal, for Armored Cables	128
Barrier Glands (CG.BA)	Metal, for Armored Cables	131
Cable Glands (CG.P*DS.*.PA.*)	Polyamide for non armored cables	134
Barrier Glands (CG.BN.*)	Metal, for non armored cables	online
Cable Glands (CG.CO*)	Metal, for flexible conduits	online
Stopping Plugs (SP.*)	Plastic or Metal	online
Adapters (AD.*)	Plastic or Metal	online
Breather Drains (BD*)	Metal	online

Terminal and Junction Boxes

For installation of signal and power distribution networks in hazardous areas, various types of terminal boxes and junction boxes are available. Several enclosure sizes and custom configurations with terminal and cable gland types ensure the optimal solution for any application. They are certified according to ATEX and additional international standards. Types of explosion protection include Ex eb, Ex ia, Ex tb, and Ex op pr. Solutions are made out of glass fiber reinforced polyester, aluminum, and high-quality stainless steel.

GR.T—Glass Fiber Reinforced Polyester

This standardized enclosure series for all Pepperl+Fuchs products consists of carbon-loaded, glass fiber reinforced polyester with stainless steel screw covers. The GR series provides an anti-static, UV-stabilized, and corrosion-resistant solution. Many features allow for easy installation and operation. Enclosures are certified for operation in temperatures as low as –60 °C and can be used in many applications as a replacement for stainless steel.

SR.T—Stainless Steel

Designed for use in hazardous areas and harsh environments, the terminal boxes and junction boxes from the SR enclosure series in stainless steel create a new benchmark in flexibility. Their modular design allows the integration of any accessories, such as flange plates, hinges, mounting brackets or lid security, according to customer requirements. They are suitebale for wall mounting and can be screwed in directly using 90° rotatable mounting brackets or rivet nuts without further adjustment.

EA/DA—Aluminum

This series features four different sizes of enclosure. They are Ex e and Ex tD certified and manufactured from marine-grade aluminum with increased corrosion resistance. This meets the requirements of many indoor and outdoor applications. EA/DA terminal and junction boxes can be equipped with various types of terminals and cable glands based on your individual needs.

SR.TFO—Fiber Optic Splice Box Stainless Steel

This range of fiber optic splice boxes is specifically designed for protecting optical fiber cable splices in hazardous areas. The box design is based on the SR-Series. Up to 8 splice trays are installed inside the sturdy stainless steel enclosure.

GR.TFO—Fiber Optic Splice Box GRP

The GR.TFO series is a range of fiber optic splice boxes designed for protection of optical fiber cable splices in hazardous areas. Up to 8 splice trays are installed inside the sturdy GRP enclosure. The splice trays are according to DIN 47662 and Telecom standards, each tray can hold up to 12 fusion-type splices and is equipped with appropriate splice protection holders and FO strain relief.

For further information, visit
pepperl-fuchs.com/pf-tjb

Terminal Boxes in GRP (GR.T*)

Features

- Glass fiber reinforced polyester enclosures
- Installation in Zones 1/21 and 2/22
- Ex eb, Ex ia and Ex tb certified
- Modern enclosure design with high impact resistance
- Easy installation due to easily accessible mounting points
- Prefabricated mounting grid for flexible arrangement of internal components
- Durable IP rating due to foamed gasket and protected sealing area
- Easy to open without damage from multiple pry points
- Withstands temperatures down to –60 °C
- Customizable configuration of terminals, cable entries, and cable gland types as per specification
- Sturdy hinges as option

Function

The GR.* series can be equipped with various types and quantities of terminals, entry devices, and accessories. Pepperl+Fuchs solution engineering teams provide any custom configuration, including combinations of terminals .

This standardized enclosure series for all Pepperl+Fuchs products consists of carbon-loaded, glass fiber reinforced polyester with stainless steel cover screws.

Technical Data		
Electrical specifications	Operating voltage	690 V AC/DC max. , depending on size for ATEX/IECEx 600 V AC/DC max. for North American approvals
	Operating current	350 A max., depending on size and certification
Mechanical specifications	Dimensions	see data table
	Enclosure cover	fully detachable, optional hinges
	Cover seal	foamed silicone
	Degree of protection	IP66 , Type 4X
Material	Enclosure	carbon loaded, antistatic glass fiber reinforced polyester (GRP)
	Finish	inherent color black
Ambient conditions	Ambient temperature	–60 ... 65 °C (–76 ... 149 °F)
Data for application in connection with hazardous areas	EU-Type Examination Certificate	CML 17 ATEX 3255X, CML 17 ATEX 3084U
	Marking	Ex II 2 GD, Ex eb IIC T* Gb, Ex ia IIC T* Gb, Ex tb IIIC T** °C Db T6/T80 °C @ Ta +40 °C, T5/T95 °C @ Ta +55 °C, T4/T130 °C @ Ta +65 °C
International approvals	ETL approval	ETL certificate: Intertek 5003368 , Intertek 5022079 Approved for: Class I, Division 2, Groups A, B, C, D Class II, Division 2, Groups F, G Class III cETLus: according UL 1773 , UL 121201 , CSA C22.2, No. 40, 213 Ambient temperature: -40 ... 65 °C (-40 ... 149 °F)
	IECEx approval	IECEx CML 17.0144X, IECEx CML 17.0039U
	PESO approval	PESO A/P/HQ/KA/104/5627 (P432459)
	IA approval	MASC S/18-1639X, MASC S/18-1359U

For further technical data, please refer to individual datasheets.

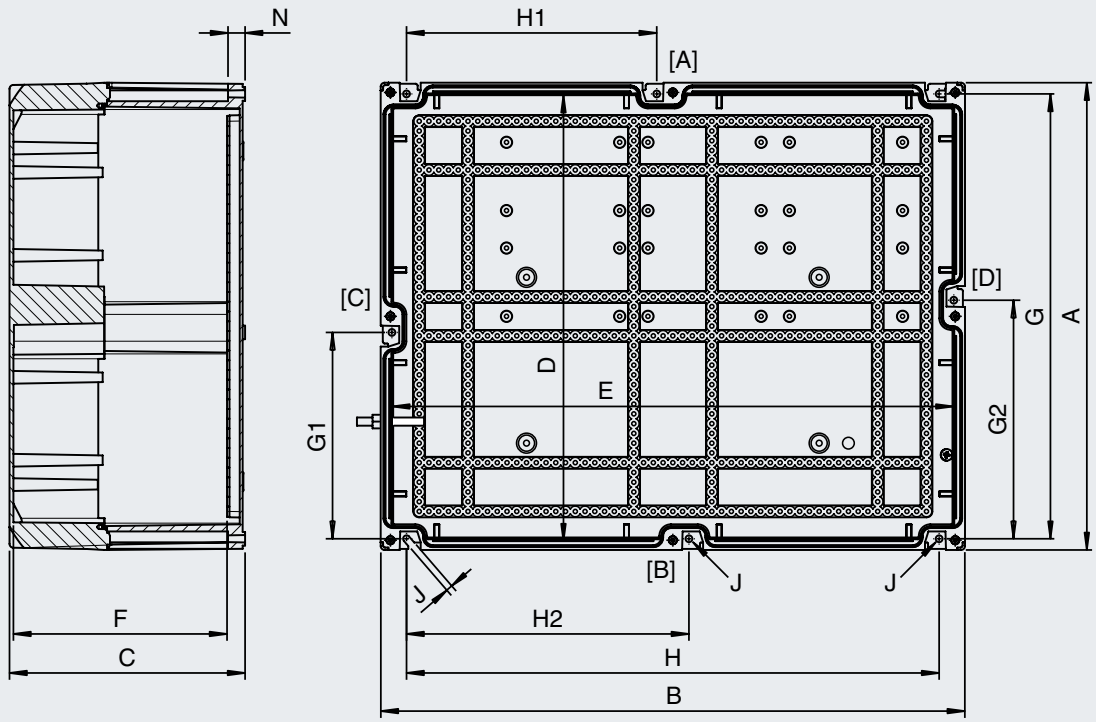

See data table for dimension values. Image and drawing are generic for this device type and may deviate from the specific version.

For more information, visit:

Dimensions and Enclosure Details	External dimensions [mm]			Internal dimensions [mm]			Mounting [mm]									Mass approx.	Cover screws		
Type	**A**	**B**	**C**	**D**	**E**	**F**	**G**	**G1**	**G2**	**H**	**H1**	**H2**	**J**	**N**	**Screws qty.**	**[kg]**	**Mx**	**qty.**	**Torque [Nm]**
GR.T*.10.10.07	99	99	65	76	76	48	66	–	–	84	–	–	5	13	2	0.35	M4	4	1.5
GR.T*.13.13.09	129	129	85	106	106	68	96	–	–	114	–	–	5	13	2	0.61	M4	4	1.5
GR.T*.13.18.09	129	179	91.5	106	156	69	106	–	–	126	–	–	7	18	2	1	M6	4	3.5
GR.T*.18.18.10	179	179	104	156	156	81.5	126	–	–	156	–	–	7	18	2	1.4	M6	4	3.5
GR.T*.18.24.10	179	239	104	156	216	81.5	156	–	–	186	–	–	7	18	2	1.7	M6	4	3.5
GR.T*.18.36.10	179	359	104	156	336	71.5	156	–	–	306	–	–	7	18	4	2.4	M6	4	3.5
GR.T*.18.36.17	179	359	166.5	156	336	144	156	–	–	336	–	–	7	18	4	3.1	M6	4	3.5
GR.T*.36.36.10	359	359	104	336	336	81.5	306	–	–	336	–	–	7	18	4	3.7	M6	4	3.5
GR.T*.36.36.17	359	359	166.5	336	336	144	306	–	–	336	–	–	7	18	4	4.6	M6	4	3.5
GR.T*.36.36.24	359	359	241.5	336	336	219	306	–	–	336	–	–	7	18	4	6.6	M6	4	3.5
GR.T*.36.72.17	359	719	166.5	336	696	144	336	–	–	666	316.5	349.5	7	18	6	8.3	M6	6	3.5
GR.T*.36.72.24	359	719	241.5	336	696	219	336	–	–	666	316.5	349.5	7	18	6	11.3	M6	6	3.5
GR.T*.48.60.24	479	599	241.5	456	576	219	456	211.5	244.5	546	256.5	289.5	7	18	8	12.2	M6	8	3.5

Mass is valid for empty enclosure, it will increase according to integrated components and cable glands.

Terminal Boxes in Stainless Steel (SR.T*)

Features

- Stainless Steel enclosure
- Installation in Zone 1, Zone 2, Zone 21 and Zone 22
- Installation in Class I, II, Division 2
- Ex eb, Ex ia and Ex tb certified
- 16 enclosure size options
- Return Flange Sealing provides Drain Channel
- Customizable configuration of terminals, cable entries and cable gland types as per specification
- Customizable configuration of gland plates, ground bolt and hinges as per specification
- Option for vertical or horizontal mounting provides high flexibility
- Up to 4 gland plates
- Wide range of accessories available

Function

The SR series is a flexible range of terminal boxes that are fully customizable. Enclosures can meet the needs of user specifications by being supplied with or without accessories such as cover hinges, mounting brackets or gland plates. Enclosures are manufactured from brushed AISI 316L stainless steel and all fixings are manufactured from A4 grade stainless steel as standard to provide excellent tarnish and corrosion resistance. Your solution can be mounted in portrait or landscape orientation in temperatures ranging from -60 °C up to +90 °C. For terminal and entry device configuration options please see overleaf. Further configurations can be confirmed by your local Pepperl+Fuchs office.

Technical Data		
Electrical specifications	Operating voltage	1100 V AC/DC max. for ATEX/IECEx
	Operating current	350 A max., depending on size and certification
Mechanical specifications	Dimensions	see data table
	Enclosure cover	fully detachable
	Cover seal	silicone
	Degree of protection	IP66 , Type 4X
Material	Enclosure	1.5 mm AISI 316L, (1.4404) stainless steel
	Finish	brushed
Ambient conditions	Ambient temperature	-60 ... 65 °C (-76 ... 149 °F)
Data for application in connection with hazardous areas	EU-Type Examination Certificate	CML 16 ATEX 3008X
	Marking	Ex II 2 GD, Ex eb IIC T* Gb, Ex tb IIIC T** Db or Ex ia IIC T* Gb, T6/T80 °C @ Ta +40 °C, T5/T95 °C @ Ta +55 °C, T4/T130 °C @ Ta +60 °C
International approvals	ETL approval	ETL certificate: Intertek 5003368 , Intertek 5022079 Approved for: Class I, Division 2, Groups A, B, C, D, Class II, Division 2, Groups F, G; Class III cETLus: according UL 1773 , UL 121201 , CSA C22.2, No. 40, 213 Ambient temperature: -40 ... 65 °C (-40 ... 149 °F)
	IECEx approval	IECEx CML 16.0007X
	Peso approval	PESO A/P/HQ/MH/104/4900 (P386871)
	CCC approval	2023122303116185
	UKCA approval	CML 21 UKEX 3892X
	Further approvals	available on request

For further technical data, please refer to individual datasheets.

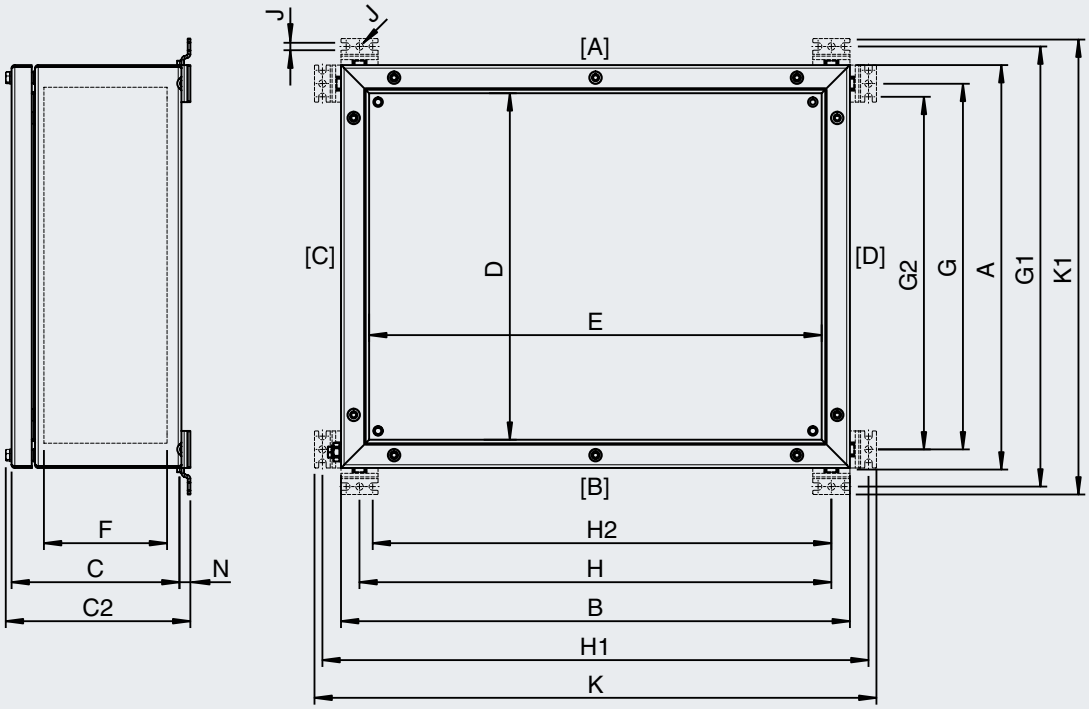

For more information, visit:

Dimensions and Enclosure Details	External dimensions [mm]						Internal dimensions [mm]			Mass approx.	Cover screws		
Type	**A**	**B**	**C**	**C2**	**K**	**K1**	**D**	**E**	**F**	**[kg]**	**Mx**	**qty.**	**Torque [Nm]**
SRS.10.11.09	96	110	86	91	145	-	72	86	72	0.7	M6	4	3 - 3.5
SRS.11.14.09	110	136	86	91	-	145	86	112	72	1	M6	4	3 - 3.5
SRS.15.15.09	150	150	90	99	185	-	126	126	80	1.9	M6	4	3 - 3.5
SRS.15.19.09	150	190	90	99	225	-	126	166	80	2.5	M6	4	3 - 3.5
SRS.19.19.10	190	190	100	109	225	-	166	166	90	3	M6	4	3 - 3.5
SRM.26.26.09	260	260	87	101	310	310	206	206	51.5	5.3	M6	4	3 - 3.5
SRM.26.26.16	260	260	160	174	310	310	206	206	124.5	5.8	M6	4	3 - 3.5
SRM.26.26.22	260	260	220	234	310	310	206	206	184.5	6.3	M6	4	3 - 3.5
SRM.31.31.09	310	310	87	101	360	360	256	256	51.5	7.2	M6	4	3 - 3.5
SRM.31.31.16	310	310	160	174	360	360	256	256	124.5	8	M6	4	3 - 3.5
SRM.31.31.22	310	310	220	234	360	360	256	256	184.5	8.8	M6	4	3 - 3.5
SRM.38.48.09	380	480	87	101	430	530	326	426	51.5	11	M6	6	3 - 3.5
SRM.38.48.16	380	480	160	174	530	530	326	426	124.5	12	M6	6	3 - 3.5
SRM.38.48.22	380	480	220	234	530	530	326	426	184.5	13	M6	6	3 - 3.5
SRL.48.48.16	480	480	160	174	530	530	426	426	124.5	14	M6	8	3 - 3.5
SRL.48.48.22	480	480	220	234	530	530	426	426	184.5	16	M6	8	3 - 3.5
SRL.48.76.16	480	760	160	174	810	530	426	706	124.5	20	M6	8	3 - 3.5
SRL.48.76.22	480	760	220	234	810	530	426	706	184.5	22	M6	8	3 - 3.5

Mass is valid for empty enclosure, it will increase according to integrated components and cable glands.

Standard Variants Junction Boxes

Typecode	Dimensions (H/W/D) mm	Terminals	Earth Terminals	Entry Devices	Ex Marking	Image
GR.TJI. 10.10.07.B-S0009	99 x 99 x 65 mm	4 x MUT2.5 blue	1 x MUT2.5-PE	2 x PIDS1. M16S	Ex ib IIC T* Gb Ex tb IIIC T** °C Db T6/T80 °C @ Ta +40 °C T4/T130 °C @ Ta +60 °C	
GR.TJI. 10.10.07.B-S0010	99 x 99 x 65 mm	6 x MUT2.5 blue	2 x MUT2.5-PE	3 x PIDS1. M20	Ex ib IIC T* Gb Ex tb IIIC T** °C Db T6/T80 °C @ Ta +40 °C T4/T130 °C @ Ta +60 °C	
GR.TJI. 13.13.09.B-S0008	129 x 129 x 85 mm	12 x MUT2.5 blue	2 x MUT2.5-PE	4 x PEDS1. M20	Ex ib IIC T* Gb Ex tb IIIC T** °C Db T6/T80 °C @ Ta +40 °C T4/T130 °C @ Ta +60 °C	
GR.TJE. 10.10.07.B-S0011	99 x 99 x 65 mm	6 x MUT4	2 x MUT4-PE	4 x PEDS1. M20	Ex eb IIC T* Gb Ex tb IIIC T** °C Db T6/T80 °C @ Ta +40 °C T5/T95 °C @ Ta +55 °C	
GR.TJE. 13.13.09.B-S0008	129 x 129 x 85 mm	7 x MUT2.5	2 x MUT2.5-PE	2 x PEDS1. M20 2 x PEDS1. M16S	Ex eb IIC T* Gb Ex tb IIIC T** °C Db T6/T80 °C @ Ta +40 °C T5/T95 °C @ Ta +55 °C	
GR.TJE. 13.13.09.B-S0004	129 x 129 x 85 mm	9 x UT2.5	2 x UT2.5-PE	4 x PEDS1. M20 1 x SP.PE. M20	Ex eb IIC T* Gb Ex tb IIIC T** °C Db T6/T80 °C @ Ta +40 °C T5/T95 °C @ Ta +55 °C	
GR.TJE. 13.13.09.B-S0005	129 x 129 x 85 mm	12 x UT2.5	2 x UT2.5-PE	6 x SP.PE. M20	Ex eb IIC T* Gb Ex tb IIIC T** °C Db T6/T80 °C @ Ta +40 °C T5/T95 °C @ Ta +55 °C	
GR.TJE. 13.13.09.B-S0006	129 x 129 x 85 mm	12 x UT2.5	2 x UT2.5-PE + ECP + Stud	6 x SP.PE. M20	Ex eb IIC T* Gb Ex tb IIIC T** °C Db T6/T80 °C @ Ta +40 °C T5/T95 °C @ Ta +55 °C	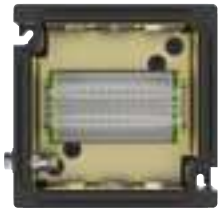

Typecode	Dimensions (H/W/D) mm	Terminals	Earth Terminals	Entry Devices	Ex Marking	Image
GR.TJE. 13.13.09.B-S0003	129 x 129 x 85 mm	6 x UT6	2 x UT6-PE	4 x PEDS1. M20	Ex eb IIC T* Gb Ex tb IIIC T** °C Db T6/T80 °C @ Ta +40 °C T5/T95 °C @ Ta +55 °C	
GR.TJE. 13.18.09.B-S0001	129 mm x 179 mm x 91 mm	18 x UT2.5	2 x UT2.5-PE	8 x PEDS1. M20	Ex eb IIC T* Gb Ex tb IIIC T** °C Db T6/T80 °C @ Ta +40 °C T5/T95 °C @ Ta +55 °C	
SR.TJI. 10.11.09.B.0-S0002	96x110x86 mm	6 x MUT2.5 blue	2 x MUT2.5-PE	2 x CG.PIDS1. M16.PA.C.15	Ex-Hexagon II 2 GD Ex ia IIC T* Gb T6/T80 °C @ Ta +40 °C T4/T130 °C @ Ta +60 °C	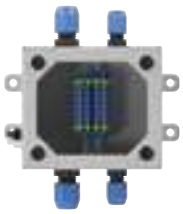
SR.TJI. 10.11.09.B.0-S0001	96 x 110 x 86 mm	6 x MUT2,5 blue	2 x MUT2.5-PE	4 x CG.PIDS1. M16	Ex-Hexagon II 2 GD Ex ia IIC T* Gb T6/T80 °C @ Ta +40 °C T4/T130 °C @ Ta +60 °C	
SR.TJE. 10.11.09.B.0-S0001	96x110x86 mm	6 x MUT2.5	2 x MUT2.5-PE	4 x CG. PEDS1.M16, 2 lower, 1 left, 1 right	Ex-Hexagon II 2 GD Ex eb IIC T* Gb, Ex tb IIIC T** Db T6/T80 °C @ Ta +40 °C T4/T130 °C @ Ta +60 °C	
SR.TJE. 11.14.09.B.0-S0001	136x110x86 mm	12 x MUT4	2 x MUT4-PE	5 x CG.PEDS1. M20. PA.C.15, 5 x BP.PDS	Ex-Hexagon II 2 GD Ex eb IIC T* Gb, Ex tb IIIC T** Db T6/T80 °C @ Ta +40 °C T4/T130 °C @ Ta +60 °C	
SR.TJE. 11.14.09.B.0-S0002	136x110x86 mm	6 x UT6	2 x UT6-PE	4 x CG.PEDS1. M20. PA.C.15, 4 x BP.PDS	Ex-Hexagon II 2 GD Ex eb IIC T* Gb, Ex tb IIIC T** Db T6/T80 °C @ Ta +40 °C T4/T130 °C @ Ta +60 °C	

Terminal Boxes in Aluminum (EA/DA*)

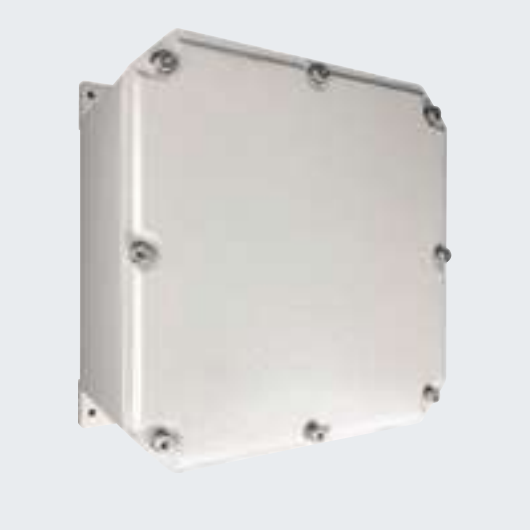

Features

- Aluminum enclosure
- Various enclosure sizes and designs
- Ex eb and Ex tb certified
- Installation in Zones 1/21 and 2/22
- Customizable configuration as per specification
- IP66 rated

Function

The CP601 marine-grade aluminum enclosures are the optimal solution for distribution applications in challenging indoor and outdoor industrial environments.

Technical Data		
Electrical specifications	Operating voltage	690 V max.
	Operating current	application-specific
Mechanical specifications	Dimensions	see data table
	Enclosure cover	fully detachable
	Cover seal	chloroprene
	Degree of protection	IP66
Material	Enclosure	Aluminum alloy
	Finish	EA: epoxy coated RAL 7032, DA: epoxy coated X15 Orange
Ambient conditions	Ambient temperature	–20 ... 55 °C (–4 ... 131 °F), depending on integrated components
Data for application in connection with hazardous areas	EU-Type Examination Certificate	SIRA 09 ATEX 3178X
	Marking	Ex II 2 GD, Ex e IIC T* Gb, Ex tD A21 T6/T80 °C @ Ta +55 °C, T5/T95 °C @ Ta +55 °C
	Maximum power dissipation	see data table
International approvals	IECEx approval	IECEx SIM 08.0017X

For further technical data, please refer to individual datasheets.

EA/DA 1608

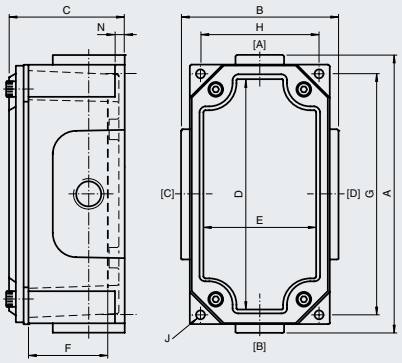

EA/DA 7535

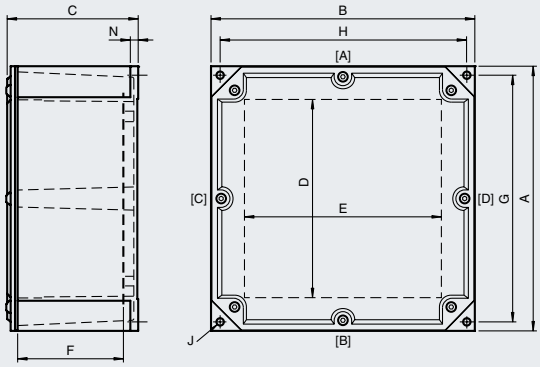

EA/DA 2020

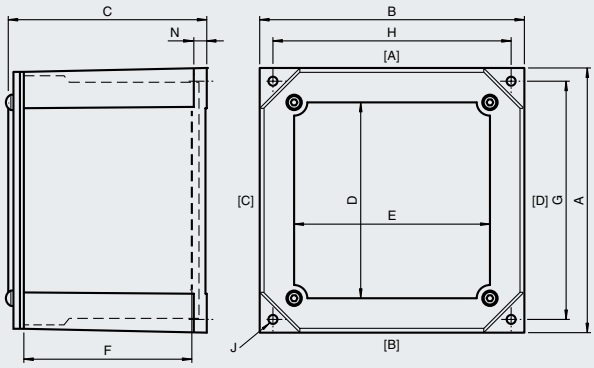

EA/DA 3030

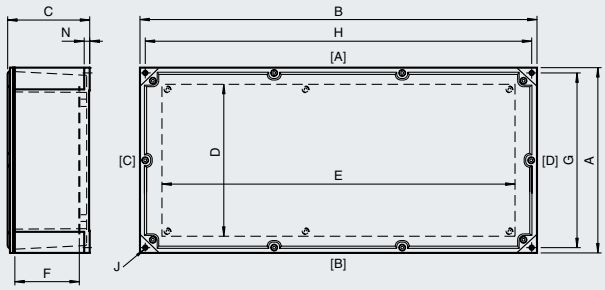

For more information, visit:

Dimensions and Enclosure Details	External dimensions [mm]			Internal dimensions [mm]			Mounting [mm]				Mass approx.	Cover screws			Max. power dissipation at T4/+40 °C
Type	**A**	**B**	**C**	**D**	**E**	**F**	**G**	**H**	**I**	**J**	**[kg]**	**Mx**	**qty.**	**Torque [Nm]**	**[W]**
EA/DA 1608	173	98	72	153	78	50	150	74	5.6	8	1.5	M6	4	4	13
EA/DA 2020	200	200	155	160	160	130	187	187	6.5	10.5	4.2	M8	4	8.5	23.5
EA/DA 3030	305	305	160	245	245	125	285	285	7	10	9.5	M8	8	8.5	41
EA/DA 7535	350	750	154	284	663	130	335	715	8.5	10	18.5	M8	10	8.5	61

Mass is valid for empty enclosure, it will increase according to integrated components and cable glands.

Splice Boxes in Stainless Steel (SR.TFO.*)

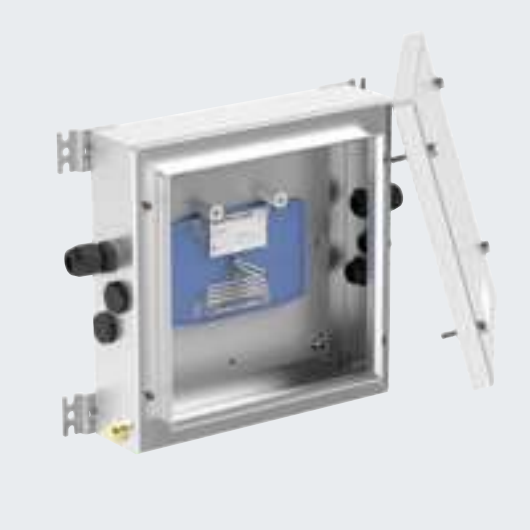

Features

- Safe protection of fiber optic cable splices in hazardous areas
- Installation in Zone 1, Zone 2, Zone 21 and Zone 22
- Ex op pr and Ex tb certified
- Stainless Steel enclosure
- Up to 8 splice trays, 12 fusion-type splices per tray
- Wide range of cable glands and stopping plugs
- Return Flange Sealing provides Drain Channel

Function

The SR.TFO.* series is a range of fiber optic splice boxes designed for protection of optical fiber cable splices in hazardous areas. Up to 8 splice trays are installed inside the sturdy stainless steel enclosure.

The splice trays are according to DIN 47662 and Telecom standards, each tray can hold up to 12 fusion-type splices and is equipped with appropriate splice protection FO strain relief is optionally available in other enclosure sizes upon request.

The enclosures are manufactured from brushed AISI 316L stainless steel which provides excellent tarnish and corrosion resistance. All enclosures feature a 45° return flange sealing method which channels water away from the seal area and also prevents accumulated dirt and dust from entering the enclosure when the cover is opened.

Technical Data		
Mechanical specifications	Enclosure cover	fully detachable
	Cover seal	silicone
	Degree of protection	IP66
Material	Enclosure	1.5 mm AISI 316L, (1.4404) stainless steel
	Finish	brushed
Fiber optic splice tray	Quantity of splice connections per tray	12
	Type of splices	fusion with 60 mm heatshrink protectors
	Standards	DIN 47662 and Telecom standards
Ambient conditions	Ambient temperature	–40 ... 55 °C (–58 ... 131 °F)
Data for application in connection with hazardous areas	EU-Type Examination Certificate	CML 16 ATEX 3009X, BASEEFA 14 ATEX 0368U
	Marking	Ex II 2 GD, Ex op pr IIC T* Gb, Ex tb IIIC T** °C Db T5/T95 °C @ Ta +55 °C T6/T80 °C @ Ta +40 °C
International approvals	IECEx approval	IECEx CML 16.0008X, IECEx BAS 14.0169U
	CCC approval	2023122303116185
	UKCA approval	CML 21 UKEX 3892X
	Further approvals	available on request

For further technical data, please refer to individual datasheets.

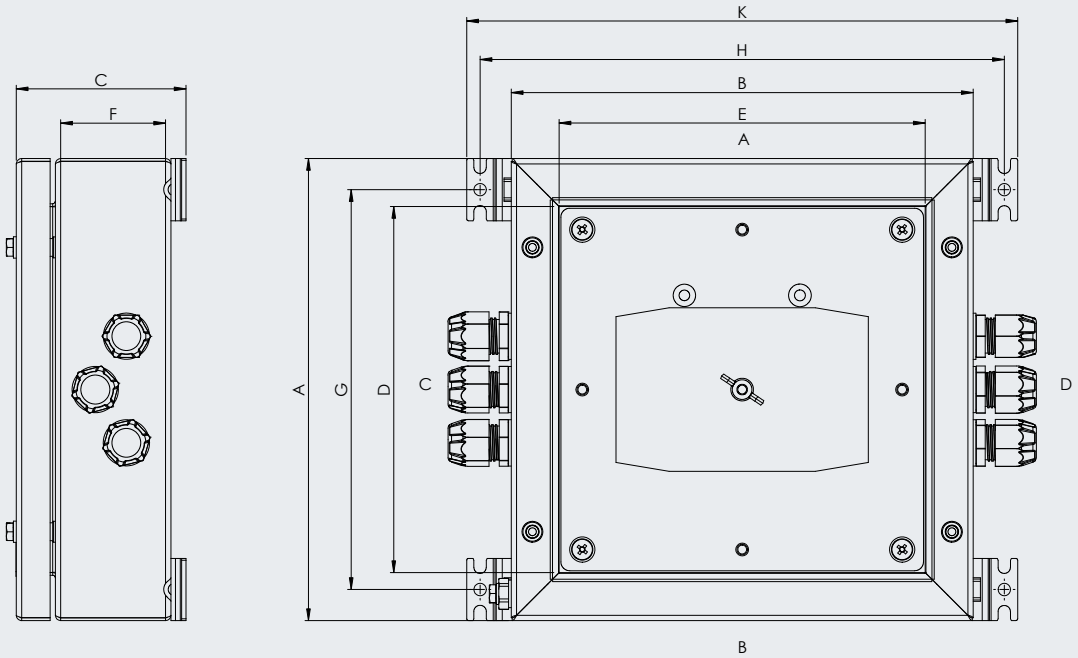

For more information, visit:

Dimensions and Enclosure Details	External dimensions [mm]						Internal dimensions [mm]			Cover screws			Mounting [mm]								
Type	**A**	**B**	**C**	**C2**	**K**	**K1**	**D**	**E**	**F**	**Mx**	**qty.**	**Torque [Nm]**	**G**	**G1**	**G2**	**H**	**H1**	**H2**	**J**	**N**	**screws qty.**
SR.TFO.26.26.09.B.*	260	260	87	101	310	310	206	206	51.5	M6	4	3.5	295	225	212.5	225	295	282.5	7	8.5	4

Cable Entries	Splice trays	Mass approx.	Cable entries faces C and D				
Type	**qty.**	**[kg]**	**qty.**	**Series**	**Type**	**Clamping Range [mm]**	**Note**
SR.TFO.26.26.09.B.0-S0001	1	5	2	Cable Glands, Plastic	CG.PEDS1.M20.PA.S.10	6 ... 12	All spare entries fitted with stopping plugs
SR.TFO.26.26.09.B.0-S0002	2	5.1	4	Cable Glands, Plastic	CG.PEDS1.M20.PA.S.10	6 ... 12	All spare entries fitted with stopping plugs
SR.TFO.26.26.16.B.0-S0003	3	5.2	6	Cable Glands, Plastic	CG.PEDS1.M20.PA.S.10	6 ... 12	All spare entries fitted with stopping plugs
SR.TFO.26.26.16.B.0-S0004	4	5.3	8	Cable Glands, Plastic	CG.PEDS1.M20.PA.S.10	6 ... 12	All spare entries fitted with stopping plugs
SR.TFO.26.26.16.B.0-S0005	5	5.4	10	Cable Glands, Plastic	CG.PEDS1.M20.PA.S.10	6 ... 12	All spare entries fitted with stopping plugs
SR.TFO.26.26.16.B.0-S0006	6	5.5	12	Cable Glands, Plastic	CG.PEDS1.M20.PA.S.10	6 ... 12	All spare entries fitted with stopping plugs
SR.TFO.26.26.16.B.0-S0007	7	5.6	14	Cable Glands, Plastic	CG.PEDS1.M20.PA.S.10	6 ... 12	All spare entries fitted with stopping plugs
SR.TFO.26.26.16.B.0-S0008	8	5.7	16	Cable Glands, Plastic	CG.PEDS1.M20.PA.S.10	6 ... 12	All spare entries fitted with stopping plugs

Mass is valid for empty enclosure, it will increase according to integrated components and cable glands.

Splice Boxes in GRP (GR.TFO.*)

Features

- Safe protection of fiber optic cable splices in hazardous areas
- Up to 8 splice trays, 12 fusion-type splices per tray
- Installation in Zone 1, Zone 2, Zone 21 and Zone 22
- Ex op pr and Ex tb certified
- Carbon loaded, antistatic glass fiber reinforced polyester
- Modern design with high impact resistance
- Easy installation due to easily accessible mounting points
- Easy cover opening without damage due to mulitple pry points
- Wide range of cable glands and stopping plugs

Function

The GR.TFO.* series is a range of fiber optic splice boxes designed for protection of optical fiber cable splices in hazardous areas. Up to 8 splice trays are installed inside the sturdy GRP enclosure. The splice trays are according to DIN 47662 and Telecom standards, each tray can hold up to 12 fusion-type splices and is equipped with appropriate splice protection holders and FO strain relief.

The enclosure series GR* consists of carbon-loaded, glass-fiber reinforced polyester with stainless steel cover screws. It provides an anti-static, UV stabilized and corrosion resistant solution. Many features provide for easy installation and handling. It is certified for operation in low temperatures of down to –60 °C and thus can be applied in many applications as a replacement for stainless steel.

Technical Data		
Mechanical specifications	Enclosure cover	fully detachable
	Cover seal	foamed silicone
	Degree of protection	IP66
Material	Enclosure	carbon loaded, antistatic glass fiber reinforced polyester (GRP)
	Finish	inherent color black
Fiber optic splice tray	Quantity of splice connections per tray	12
	Type of splices	fusion with 60 mm heatshrink protectors
	Standards	DIN 47662 and Telecom standards
Ambient conditions	Ambient temperature	–40 ... 55 °C (–40 ... 149 °F)
Data for application in connection with hazardous areas	EU-Type Examination Certificate	CML 17 ATEX 3255X, BASEEFA 14 ATEX 0368U
	Marking	Ex II 2 GD, Ex op pr IIC T* Gb, Ex tb IIIC T** °C Db, T6/T80 °C @ Ta +40 °C, T5/T95 °C @ Ta +55 °C
International approvals	IECEx approval	IECEx CML 17.0144X, IECEx BAS 14.0169U
	CCC approval	2020322303002568
	UKCA approval	CML 21UKEX3896X
	Further approvals	available on request

For further technical data, please refer to individual datasheets.

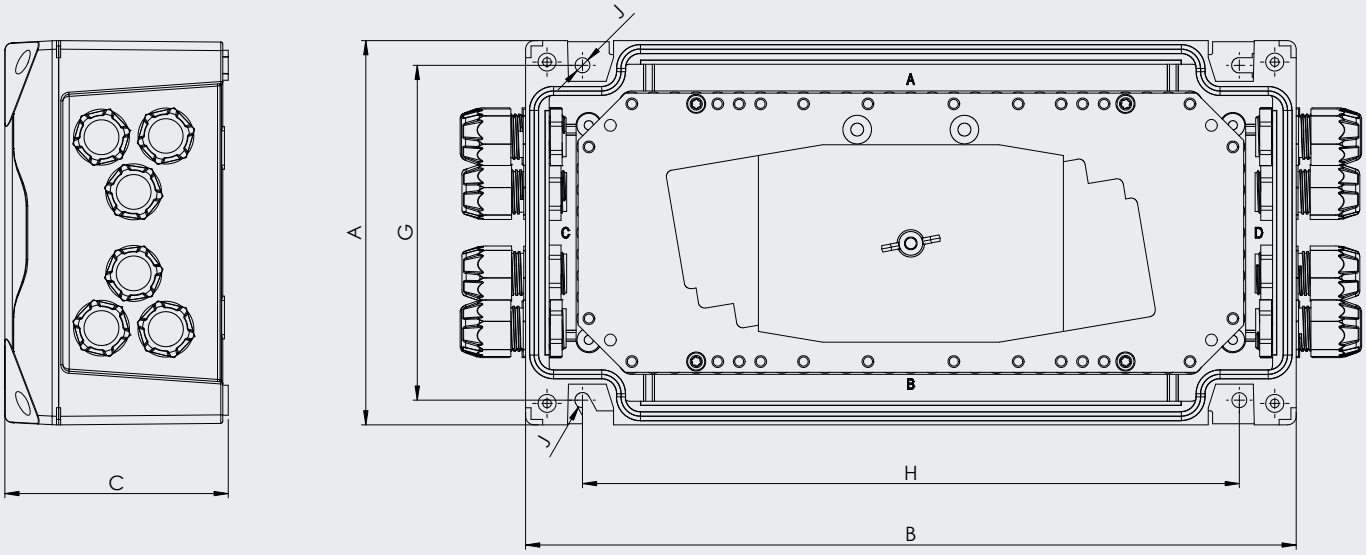

For more information, visit:

Dimensions and Enclosure Details	External dimensions [mm]			Internal dimensions [mm]			Cover screws			Mounting [mm]				
Type	**A**	**B**	**C**	**D**	**E**	**F**	**Mx**	**qty.**	**Torque [Nm]**	**G**	**H**	**J**	**N**	**screws qty.**
GR.TFO.18.36.10.B	179	359	104	156	336	71.5	M6	4	3.5	156	306	7	18	4

Cable Entries	Splice trays	Mass approx.	Cable entries faces C and D				
Type	**qty.**	**[kg]**	**qty.**	**Series**	**Type**	**Clamping Range [mm]**	**Note**
GR.TFO.18.36.10.B-S0001	1	2.4	1	Cable Glands, Plastic	CG.PEDS1.M20.PA.S.10	6 ... 12	All spare entries fitted with stopping plugs
GR.TFO.18.36.10.B-S0002	2	2.4	2				
GR.TFO.18.36.10.B-S0004	4	2.6	4				
GR.TFO.18.36.10.B-S0006	6	2.8	6				
GR.TFO.18.36.17.B-S0008	8	3.2	8				

Mass is valid for empty enclosure, it will increase according to integrated components and cable glands.

Terminal and Junction Boxes

To protect signal and power distribution networks from harsh ambient conditions and explosion hazards, flameproof terminal boxes and junction boxes are designed for use in gas groups IIB+H_2 and IIC. Enclosures can be adapted to any application requirement with a variety of enclosures and customizable configurations with terminal and cable gland types. Corresponding degrees of protection and ambient temperature ranges, as well as rugged enclosure materials such as copper-free, marine-grade aluminum, and stainless steel, ensure long-term durability and safe operation.

EJB—Aluminum, EJBX—Stainless Steel

Specially designed for gas group IIB+H_2 environments, this range of enclosures lays a solid foundation for the application-specific configuration of terminal boxes. Various terminals and types of cable gland can be integrated into multiple sizes of enclosure. Enclosures are manufactured from copper-free aluminum with increased corrosion resistance or high-quality stainless steel. Their durability and design meet the requirements of many industries, including offshore and marine applications.

F-Series—Aluminum

F* TB series terminals and junction boxes are based on Ex d, Ex d, and Ex tD certified enclosures and manufactured from marine-grade aluminum with increased corrosion resistance. Three series of flameproof terminal box allow safe installation of distribution networks for gas group IIC and IIB hazardous areas.

GUB—Ex d IIC Aluminum, GUBX—Ex d IIC Stainless Steel

Specially designed for gas group IIC environments and a wide range of ambient temperatures, this series allows terminal boxes to be efficiently adapted to almost all application requirements. High-quality aluminum and stainless steel materials and a high degree of protection ensure protection of the integrated terminals in very harsh conditions.

For further information, visit
pepperl-fuchs.com/pf-tjb-exd

Terminal Boxes (Ex d IIB+H_2) in Aluminum and Stainless Steel (EJB*.T)

Features

- Enclosures made of copper-free aluminum or AISI 316L stainless steel
- Suitable for operation in Zones 1/21 and 2/22
- Suitable for operation in Class I, II Division 1
- Degree of protection IP66 or IP66/IP67, NEMA Type 4X
- Certified Ex d IIB+H_2 and Ex tb
- Many enclosure size options
- Free configuration of cable entries and terminals for
- customized terminal boxes
- Customizable configuration of cable gland types as per specification
- Choice of viewing windows for monitoring instruments

Function

The EJB and EJBX series of Ex d IIB+H_2 certified enclosures form the optimal basis for the application-specific configuration of terminal boxes. A wide range of components and cable glands can be integrated into Ex d and Ex tb certified flame-proof enclosures. They come in many sizes and designs and are manufactured from high-quality stainless steel or copper-free aluminum with increased corrosion resistance.

The durable, versatile enclosures meet the requirements of many industries, including offshore and marine applications.

For enclosure details, please refer to datasheet EJB* Control and Distribution Panels (Ex d).

Technical Data		
Electrical specifications	Operating voltage	1500 V DC/1000 V AC max. for ATEX/IECEx600 V AC/DC max. for North American approvals
	Operating current	1600 A max.
Mechanical specifications	Dimensions	see data table in datasheet EJB* Control and Distribution Panels (Ex d)
	Enclosure cover	detachable, optional hinges
	Cover seal	none, O-ring for IP66/67
	Degree of protection	IP66 (IP66/67 with O-ring) , NEMA Type 4, 4X, 7, 9
Material	Enclosure	Aluminum alloy or AISI 316L stainless steel
	Finish	epoxy coated RAL 7005 (grey) or shot peened
Ambient conditions	Ambient temperature	–50 ... 60 °C (–58 ... 140 °F), depending on integrated components
Data for application in connection with hazardous areas	EU-Type Examination Certificate	INERIS 14 ATEX 0022X, INERIS 14 ATEX 9010U
	Marking	Ex II 2 GD, Ex d IIB+H_2 T* Gb, Ex tb IIIC T** °C Db T6/T85 °C, T5/T100 °C, T4/T135 °C,T3/T200 °C depending on configuration, ambient temperature and built-in power loss
	Maximum power dissipation	see data table in datasheet EJB* Control and Distribution Panels (Ex d)
International approvals	UL approval	Approved for: Class I, Division 1, Groups B, C, D Class II, Division 1, Groups E, F, GType 4, 4X, 7, 9cULus Empty enclosure E482035 , UL 50E , UL 1203 , CSA C22.2, No. 25, 30 cETLus Control panels E5003368 Ambient temperature -25 ... 60 °C (-13 ... 140 °F)
	IECEx approval	IECEx INE 14.0029X, IECEx INE 14.0028U
	Further approvals	available on request

For further technical data, please refer to individual datasheets.

Terminal Boxes (Ex d IIC) in Aluminum and Stainless Steel (GUB*.T)

Features

- Enclosures made of copper-free aluminum or AISI 316L stainless steel
- Suitable for operation in Zones 1/21 and 2/22
- Certified Ex d IIC and Ex tb
- Many enclosure size options
- Free configuration of cable entries and terminals for
- customized terminal boxes
- Customizable configuration of cable gland types as per specification

Function

The GUB and GUBX series of Ex d IIC certified enclosures form the optimal basis for the application-specific configuration of terminal boxes. A wide range of components and cable glands can be integrated into Ex d and Ex tb certified flameproof enclosures. They come in many sizes and designs and are manufactured from high-quality stainless steel or copper-free aluminum with increased corrosion resistance. The durable, versatile enclosures meet the requirements of many industries, including offshore and marine applications.

For enclosure details, please refer to datasheet GUB* Control and Distribution Panels (Ex d).

Technical Data		
Electrical specifications	Operating voltage	1000 V DC/1500 V AC max.
	Operating current	recommended: 1600 A max.
Mechanical specifications	Dimensions	see data table in datasheet GUB* Control and Distribution Panels (Ex d)
	Enclosure cover	threaded round cover
	Cover seal	none, O-ring for IP66/67
	Degree of protection	IP66 (IP66/67 with O-ring)
Material	Enclosure	Aluminum alloy or AISI 316L stainless steel
	Finish	epoxy coated RAL 7005 (grey) or shot peened
Ambient conditions	Ambient temperature	–60 ... 60 °C (–76 ... 140 °F), depending on integrated components
Data for application in connection with hazardous areas	EU-Type Examination Certificate	INERIS 14 ATEX 0035X, INERIS 16 ATEX 9005U
	Marking	Ex II 2 GD, Ex d IIC T* Gb, Ex tb IIIC T** °C Db T6/T85 °C, T5/T100 °C, T4/T135 °C,T3/T200 °C depending on configuration, ambient temperature and built-in power loss
	Maximum power dissipation	see data table in datasheet GUB* Control and Distribution Panels (Ex d)
International approvals	IECEx approval	IECEx INE 14.0042X, IECEx INE 16.0051U
	Further approvals	available on request

For further technical data, please refer to individual datasheets.

Terminal Boxes in Aluminum (F* TB)

Features

- Aluminum enclosure
- Ex d and Ex tD certified
- Installation in Zones 1/21 and 2/22
- Gas group IIC or gas group IIB
- Customizable configuration of terminals, cable entries, and cable gland types as per specification
- IP66 rated

Function

For IIC or IIB hazardous areas, three series of flameproof terminal boxes allow safe installation of distribution networks, especially in very harsh ambient conditions.

Technical Data		
Electrical specifications	Operating voltage	see data table
	Operating current	see data table
Mechanical specifications	Dimensions	see data table
	Enclosure cover	detachable
	Cover seal	chloroprene/nitrile O-ring
	Degree of protection	IP66
Material	Enclosure	Aluminum alloy
	Finish	epoxy coated RAL 7032
Ambient conditions	Ambient temperature	–20 ... 60 °C (–4 ... 140 °F), depending on integrated components
Data for application in connection with hazardous areas	EU-Type Examination Certificate	see data table
	Maximum power dissipation	see data table, maximum power dissipation at T4/+40 °C
International approvals	IECEx approval	see data table

For further technical data, please refer to individual datasheets.

FW*

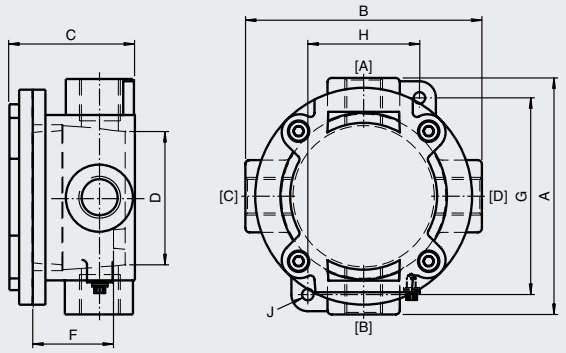

F7*

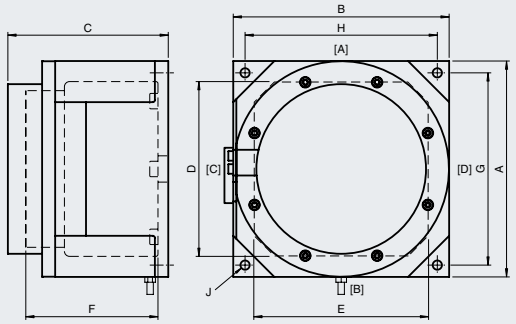

FC4*

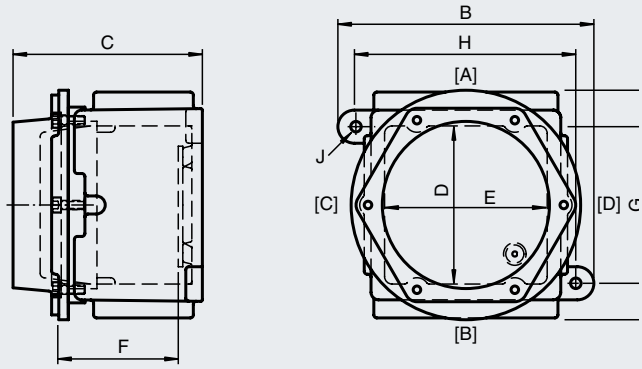

FC5*

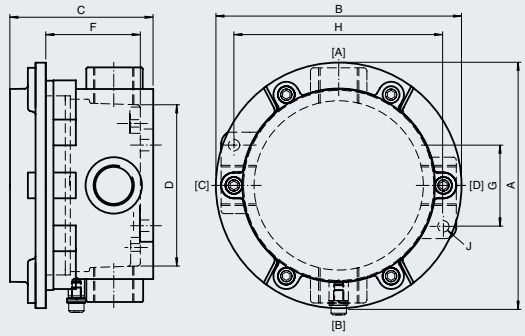

For more information, visit:

Dimensions and Enclosure Details	External dimensions [mm]			Internal dimensions [mm]			Mounting [mm]			Mass approx. [kg]	Cover screws				Cover seal
Type	**A**	**B**	**C**	**D**	**E**	**F**	**G**	**H**	**J**		**Mx**	**qty.**	**Min. yield stress [N/mm²]**	**Torque [Nm]**	
FW*	114	114	60	64	–	41	54	95	7	0.6	M6	4	450	3	nitrile O-ring
FC4*	152	152	80	104	–	60	50	130	7	1.1	M6	6	450	3	chloroprene
FC5*	150	168	100	105	105	75	104	146	7	3.2	M6	6	450	3	chloroprene
F7*	210	210	156	170	170	125	187	187	9	8	M6	8	450	3	chloroprene

Mass is valid for empty enclosure, it will increase according to integrated components and cable glands.

Data for application in connection with hazardous areas	Operating voltage	Operating current	EU-Type Examination Certificate	Marking	IECEx approval	Max. power dissipation
Type	**[V AC max.]**	**[A max.]**				**[W]**
FW*	690	100	SIRA 07 ATEX 1132X	Ⓔx II 2 G Ex d IIB T* Gb, T6 @ Ta +60 °C	IECEx TSA 07.0005X	N.A.
FC4*	690	160	SIRA 07 ATEX 1133X	Ⓔx II 2 GD Ex d IIC T* Gb, Ex tD A21, T6/T80 °C @ Ta +60 °C	IECEx SIM 07.0001X	22
FC5*	690	160	SIRA 07 ATEX 1133X	Ⓔx II 2 GD Ex d IIC T* Gb, Ex tD A21, T6/T80 °C @ Ta +60 °C	IECEx SIM 07.0001X	26
F7*	1000	600	SIRA 07 ATEX 1134	Ⓔx II 2 GD, Ex d IIB T*, Ex tD A21, T6/T80 °C @ Ta +60 °C	IECEx TSA 07.0029	59

For details, please refer to individual product datasheet. For further configurations, please contact Pepperl+Fuchs.

Control Units

For operation and monitoring of circuits and machinery in harsh and hazardous environments, versatile control units can be equipped with up to four operator elements. A multitude of control functions are available, from push buttons and control switches to LED status indicators, ammeters, and many more. Enclosures made from glass fiber reinforced polyester, aluminum, and stainless steel allow direct wall mounting while polyamide units, individually certified as full equipment, allow the design of application-optimized control panels.

LRP—Polyamide

The new LRP series is the latest in-house development of the Ex e control units from Pepperl+Fuchs. Five different sizes with the option of installing up to five operators provide great flexibility. In addition to the common standard products, flexible sizes that can be customized are also available. The lightweight, modern design offers an aesthetically pleasing solution designed to ensure a high impact-resistant, durable product.

LRS—Stainless Steel

This series features AISI 316L stainless steel enclosures and has a modular design that fits the majority of small control applications. Up to four operating elements from a wide selection of components can be flexibly combined. Standard versions available from stock on short notice.

CFP—Operating Elements for Control Units

A multitude of control functions such as push buttons and emergency stops, LED status indicators, control switches, key switches, potentiometers, ammeters, and voltmeters allow the flexible configuration of control units. Switching functions and contact configurations are determined by combining actuator heads and contact modules. Accessories facilitate the customization of each control function.

PM—Polyamide for Panel Mount

These units, individually certified as full equipment, can be flexibly equipped with a wide variety of operating elements and contact configurations. Space-efficient polyamide housings designed for panel mount allow easy installation in appropriate industrial panels and enclosures.

For further information, visit
pepperl-fuchs.com/pf-controlunits-exe

Control Units in Polyamide (LRP*.*)

Features

- Polyamide
- Ex de, Ex ib and Ex tb certified
- Up to 5 operators per enclosure
- Customizable configuration of operators, cable entry quantities, and cable gland types as per specifications
- Ideally positioned, removable grounding point
- Various sizes of label holders even for fully equipped units
- Installation in Zone 1/21 and 2/22
- 5 enclosure size options
- IP66 rated

Function

Verstatile LRP series control units are available as standard off-the-shelf control units or can be flexibly quipped with a wide variety of operators, lables, cable glands, and accessories. The installation of up to five operators in a small unit is unique on the market and enables operation of multiple functions.

The enclosures are manufactured from polyamide. Durable materials and high-quality components allow the control units to be used in harsh ambient conditions.

Technical Data		
Electrical specifications	Operating voltage	250 V max.
	Operating current	16 A max.
Mechanical specifications	Dimensions	see data table
	Enclosure cover	fully detachable
	Cover seal	one piece closed cell silicone
	Degree of protection	IP66
Material	Enclosure	carbon loaded, antistatic glass fiber reinforced polyester (GRP)
	Finish	inherent color black
Ambient conditions	Ambient temperature	–40 ... 55 °C (–40 ... 131 °F), –50 °C (–58 °F) on request
Data for application in connection with hazardous areas	EU-Type Examination Certificate	CML 16 ATEX 3009X
	Marking	Ex II 2 GD Ex db eb mb IIC T* Gb, Ex ib IIC T* Gb, Ex db eb ib mb IIC T* Gb, Ex tb IIIC T** °C Db, T6/T80 °C @ Ta +40 °C, T4/T130 °C @ Ta +55 °C
International approvals	IECEx approval	IECEx CML 16.0008X
	UKCA	CML 21 UKEX 3423U
	Further approvals	on request

For further technical data, please refer to individual datasheets.

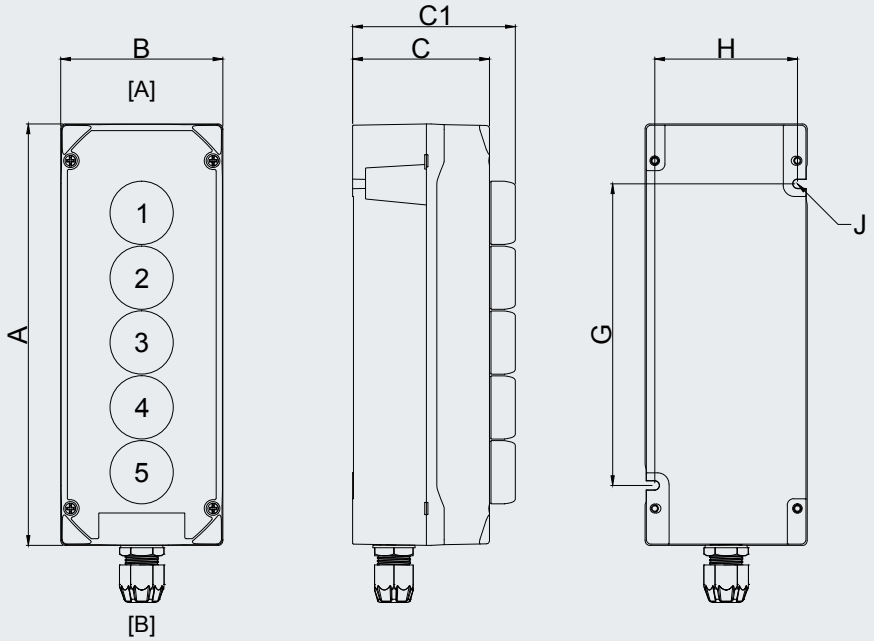

For more information, visit:

Dimensions and Enclosure Details		External dimensions [mm]				Mounting [mm]			Mass approx. [kg]
Enclosure type	**Operating elements size and quantity**	**A**	**B**	**C**	**C1**	**G**	**H**	**J**	
LRP1.*	**1x small/1x large**	90	88	87.5	100.5	50	72.5	5.6	0.3
LRP2.*	**2x small/1x large**	132	88	87.5	100.5	93	72.5	5.6	0.4
LRP2L*	**2 small/1 large/1 extra large**	160	100	87.5	125.35	97	88	5.6	0.5
LRP3*	**3x small/2x large**	178	88	87.5	125.35	136	72.5	5.6	0.5
LRP5*	**5 small/3 large/2 extra large**	260	100	87.5	125.35	186	88	5.6	0.75

Dimension C1 is maximum, it will differ according to operating elements configuration.

Cable Entries max. Quantity per Size	Cable entries Face A			Cable entries Face B		
Type Code	**Quantity**	**Cland type**	**Clamping range**	**Quantity**	**Cland type**	**Clamping range**
.B.	-	-	-	1	CG.PEDS1.M20.*	6 ... 12 mm
.C.	-	-	-	1	CG.PEDS1.M25L.*	10 ... 18mm
.E.	1	CG.PEDS1.M20.*	6 ... 12 mm	1	CG.PEDS1.M20.*	6 ... 12 mm
.I.	1	CG.PEDS1.M25L.*	10 ... 18mm	1	CG.PEDS1.M25L.*	10 ... 18mm

Standard Variants LRP

Type	Function	Color	Label-ing	Operator action	Number of poles	Contact configu-ration	Switching configu-ration	Electrical specifi-cation	Switching diagram	Image example
LRP1.D. PGMX.*	pushbutton	green	I	spring return	2	1x NC & 1x NO		(1)	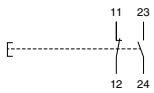	
LRP1.D. DMMX.*	double push-button	red/ green	I-O	spring return	2	1x NC & 1x NO		(1)	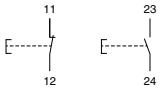	
LRP1.D. E4MX.*	mushroom button 40 mm	red	-	latching, twist to release	2	1x NC & 1x NO		(1)	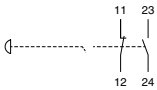	
LRP1.D. E4CX.*	mushroom button 40 mm	red	-	latching, twist to release	2	2x NC		(1)	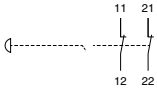	
LRP1.D. E4MZPR.*	mushroom button, with plastic shroud, pad-lockable	red	-	latching, twist to release	2	1x NC & 1x NO		(1)	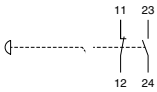	
LRP1.D. E4MZAR.*	mushroom button, with plastic lid	red	-	latching, twist to release	2	1x NC & 1x NO		(1)	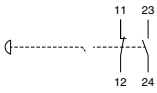	
LRP1.D. JRMX.*	mushroom button, lockable	red	-	latching, key release	2	1x NC & 1x NO		(1)	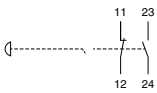	
LRP1.D. S1OX.*	control switch, large, with shroud, padlockable in '0'	black	I-O	engage – engage	2	2x NO	2 position changeover with left OFF	(1)	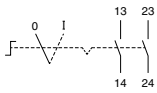	
LRP.1.D. BUZRF1.*	flashing buzzer	red	-	-	-	-	-	(4)	-	
LRP2.D. PGMX. PRMX.*	pushbutton	green (4)	I	spring return	2	1x NC & 1x NO		(1)	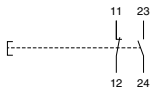	
	pushbutton	red (4)	O	spring return	2	1x NC & 1x NO		(1)	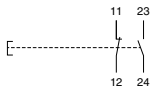	

Type	Function	Color	Label-ing	Operator action	Number of poles	Contact configu-ration	Switching configu-ration	Electrical specifi-cation	Switching dia-gram	Image example
LRP2.D. DMMX. E4MX.*	double push-button (5)	red/ green (5)	I-O	spring return	2	1x NC & 1x NO		(1)	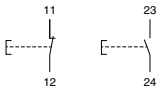	
	mushroom button 40 mm	red	-	latching, twist to release	2	1x NC & 1x NO		(1)	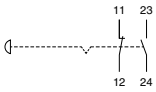	
LRP3.D. PGMX. PRMX. E4MX.*	pushbutton	green (5)	I	spring return	2	1x NC & 1x NO		(1)	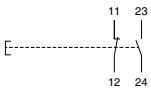	
	pushbutton	red (5)	O	spring return	2	1x NC & 1x NO		(1)	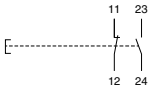	
	mushroom button 40 mm	red	-	latching, twist to release	2	1x NC & 1x NO		(1)	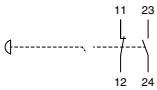	
LRP3.D. LRLX. DMMX. E4MX.*	LED indicator	red	-	-	2	-		(3)		
	double push-button	red/ green (5)	I-O	spring return	2	1x NC & 1x NO		(2)	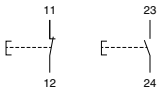	
	mushroom button 40 mm	red	-	latching, twist to release	2	1x NC & 1x NO		(2)	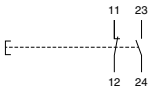	
LRP5.D. LRLX. PGMX. PRMX. E4MX.*	LED indicator	red	-	-	2	-				
	pushbutton	green (4)	I	spring return	2	1x NC & 1x NO			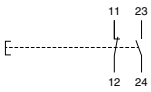	
	pushbutton	red	O	spring return	2	1x NC & 1x NO			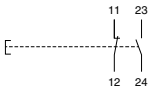	
	mushroom button 40 mm	red	-	latching, twist to release	2	1x NC & 1x NO			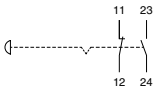	

Electrical Specifications and Labeling

Reference in standard variants	Usage category	Rated operating voltage	Rated operat-ing current
(1)	AC12 - 12 ... 250 V AC - 13 A, AC15 - 12 ... 250 V AC - 10 A, DC13 - 12 ... 110 V DC - 1 A	-	-
(2)	AC12 - 12 ... 250 V AC - 6 A, AC15 - 12 ... 250 V AC - 6 A, DC13 - 12 ... 110 V DC - 1 A	-	-
(3)	-	30 ... 250 V AC, 20 ... 24 V DC	-
Labeling			
(4)	spare pushbutton inserts included: red '0', red 'STOP', red 'OFF', green 'I', green 'START', green 'ON'		
(5)	spare pushbutton inserts included: red '0', green 'I', black '0', black 'I', black 'II', black 'arrow up', black 'arrow down'		

Control Units in Stainless Steel (LRS*.*)

Features

- Stainless Steel enclosure
- Installation in Zone 1, Zone 2, Zone 21 and Zone 22
- Ex db eb, Ex ib and Ex tb certified
- Up to 4 operators per enclosure
- Customizable configuration of operators, contact modules and cable entries as per specification
- Wide range of labels and accessories available
- 4 enclosure size options
- Degree of protection IP66
- Installation in portrait, landscape on request

Function

The versatile control units of the LRS series are available pre-configured off-the-shelf or flexibly customized with a great variety of operating elements, cable glands and accessories. The comprehensive range of control functions allow the configuration of each control unit to exactly meet any application requirements and ensure optimal space efficiency.

The enclosures are manufactured from brushed AISI 316L stainless steel to provide excellent tarnish and corrosion resistance.
Durable materials and components of high quality, such as stainless steel A4 (V4A) fixings allow the control units to be used in harsh ambient conditions

Technical Data		
Electrical specifications	Operating voltage	250 V max.
	Operating current	13 A max.
Mechanical specifications	Enclosure cover	fully detachable
	Cover seal	one piece closed cell silicone
	Degree of protection	IP66
Material	Enclosure	1.5 mm AISI 316L, (1.4404) stainless steel
	Finish	brushed
Ambient conditions	Ambient temperature	–40 ... 55 °C (–40 ... 131 °F), –50 °C (–58 °F) on request
Data for application in connection with hazardous areas	EU-Type Examination Certificate	CML 16 ATEX 3009X
	Marking	Ex II 2 GD Ex db eb ib mb IIC T* Gb, Ex tb IIIC T** °C Db, T4/T130 °C @ Ta +55 °C, T6/T80 °C @ Ta +40 °C on request
International approvals	IECEx approval	IECEx CML 16.0008X
	UKCA approval	CML 21 UKEX 3423U

For further technical data, please refer to individual datasheets.

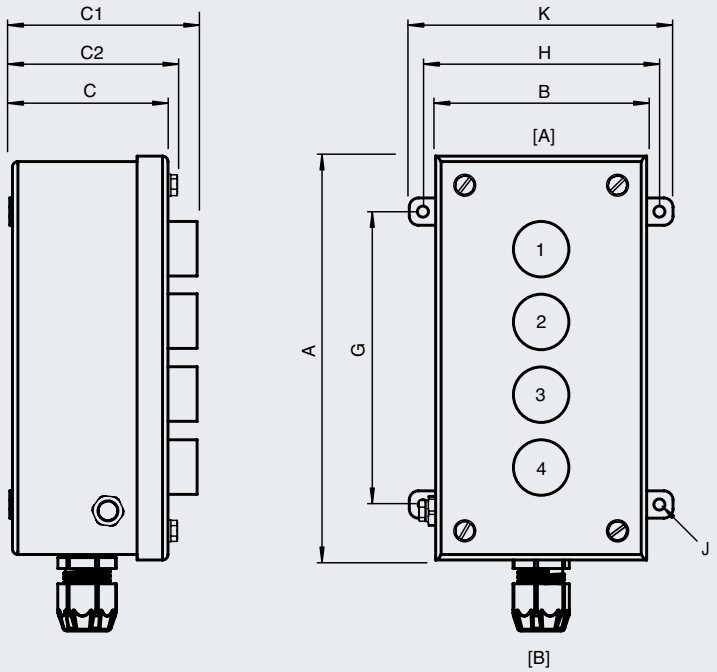

For more information, visit:

Dimensions and Enclosure Details		External dimensions [mm]						Mounting [mm]			Mass approx. [kg]
Enclosure type	**Operating elements size and quantity**	**A**	**B**	**C**	**C1**	**C2**	**K**	**G**	**H**	**J**	
LRS1.*	**1x small/1x large**	102	116	87	137	92	145	41	130	6.1	0.7
LRS2.*	**2x small**	142	116	87	137	92	145	81	130	6.1	1
LRS2.4P.*	**1x small/1x large (4-pole)**	142	116	87	137	92	145	81	130	6.1	1
LRS3.*	**3x small**	182	116	87	137	92	145	121	130	6.1	1.3
LRS4.*	**4x small/2x large**	222	116	87	137	92	145	161	130	6.1	1.5

Dimension C1 is maximum, it will differ according to operating elements configuration.

Cable Entries max. Quantity per Size	Cable entries Face A			Cable entries Face B					
Type Code	**M20 qty.**	**M20 type**	**M20 clamping range**	**M20 qty.**	**M20 type**	**M20 clamping range**	**M25 qty.**	**M25 type**	**M25 clamping range**
.B.	-	-	-	1	CG.PEDS1.M20.*	6 ... 12 mm	-	-	-
.C.	-	-	-	-	-	-	1	CG.PEDS.M25.*	10 ... 18 mm
.E.	1	SP.PE.M20.*	-	1	CG.PEDS1.M20.*	6 ... 12 mm	-	-	-

Standard Variants (LRS*.*)

Type	Function	Color	Label-ing	Operator action	Number of poles	Contact configu-ration	Switching configu-ration	Electrical specifi-cation	Switching diagram	Image example
LRS1.B. PGMX.*	pushbutton	green	I	spring return	2	1x NO/1x NC	–	(1)	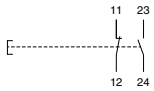	
LRS1.B. DMMX.*	double push-button	red/ green	0 – I	spring return	2	1x NO/1x NC	–	(1)	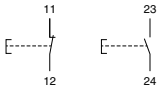	
LRS1.B. E4MX.*	mushroom button 40 mm	red	-	latching, twist to release	2	1x NO/1x NC	–	(1)	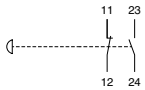	
LRS1.B. E4MZAR.*	mushroom button, with plastic lid	red	-	latching, twist to release	2	1x NO/1x NC	–	(1)	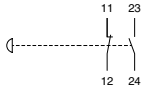	
LRS1.B. E4MZPR.*	mushroom button, with plastic shroud, pad-lockable	red	-	latching, twist to release	2	1x NO/1x NC	–	(1)	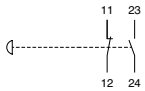	
LRS1.B. JRMX.*	mushroom button, lockable	red	–	latching, key release	2	1x NO/1x NC	–	(1)	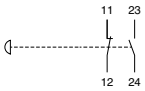	
LRS1.B. S1OX.*	control switch, large, with shroud, padlockable in '0'	black	0 – I	engage – engage	2	2x NO	2 position changeover with left OFF	(1)	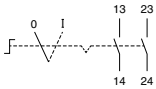	
LRS2.D. PGMX. PRMX.*	pushbutton	green (4)	I	spring return	2	1x NO/1x NC	-	(1)	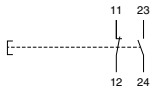	
	Pushbutton	red (4)	0	spring return	2	1 x NO/1x NC	-	(1)	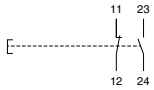	
LRS2.D. PGMX. E4MX.*	pushbutton	green	I	spring return	2	1x NO/1x NC	–	(1)	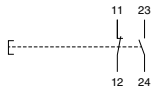	
	mushroom button	red	-	latching, pull to release	2	1x NO/1x NC	–	(1)	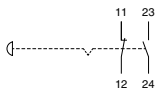	

Type	Function	Color	Labeling	Operator action	Number of poles	Contact configuration	Switching configuration	Electrical specification	Switching diagram	Image example
LRS2.D. DMMX. E4MX.*	double push-button	red/ green (5)	I	spring return	2	1x NO/1x NC	-	(1)	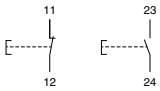	
	mushroom button	red	-	latching, twist to release	2	1x NO/1x NC	-	(1)	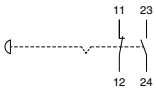	
LRS3.D. PGMX. PRMX. E4MX.*	pushbutton	green (5)	I	spring return	2	1x NO/1x NC	-	(1)	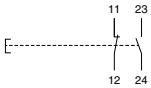	
	pushbutton	red (5)	0	spring return	2	1x NO/1x NC	-	(1)	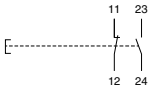	
	mushroom button	red	-	latching, twist to release	2	1x NO/1x NC	-	(1)	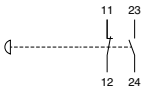	
LRS3.D. LRLX. DMMX. E4MX.*	LED indicator	red	-	-	-	-	-	(3)		
	double push-button	red/ green (5)	0 - I	spring return	2	1x NO/1x NC	-	(2)	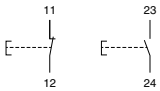	
	mushroom button	red	-	latching, twist to release	2	1x NO/1x NC	-	(2)	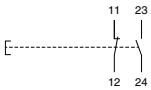	
LRS4.D. LRLX. PGMX. PRMX. E4MX.*	LED indicator	red	-	-	-	-	-	(3)		
	pushbutton	green (4)	I	spring return	2	1x NO/1x NC	-	(2)	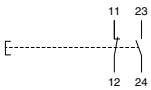	
	pushbutton	red	O	spring return	2	1x NO/1x NC	-	(2)	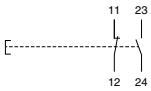	
	mushroom button	red	-	latching, twist to release	2	1x NO/1x NC	-	(2)	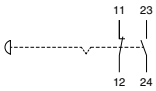	

Electrical Specifications and Labeling

Reference in standard variants	Usage category	Rated operating voltage	Rated operating current
(1)	AC12 - 12 ... 250 V AC - 13 A, AC15 - 12 ... 250 V AC - 10 A, DC13 - 12 ... 110 V DC - 1 A	-	-
(2)	AC12 - 12 ... 250 V AC - 6 A, AC15 - 12 ... 250 V AC - 6 A, DC13 - 12 ... 110 V DC - 1 A	-	-
(3)	-	30 ... 250 V AC, 20 ... 24 V DC	-
Labeling			
(4)	spare pushbutton inserts included: red '0', red 'STOP', red 'OFF', green 'I', green 'START', green 'ON'		
(5)	spare pushbutton inserts included: red '0', green 'I', black '0', black 'I', black 'II', black 'arrow up', black 'arrow down'		

Operating Elements (CFP.*)

Type Code/Model Number CFP Operating Elements

Actuator head				
XX	pushbutton, rotary switching actuator, LED indicator, measuring instrument, and more—see separate tables			
|	**Contact element**			
|	**X**	contact block, contact module, or rotary switching block—see separate tables		
|	**|**	**Accessories for operating elements**		
|	**|**	**XX**	accessories for individual operating elements—see separate table	
|	**|**	**|**	**Packaging unit**	
|	**|**	**|**		units not packaged, for use in Pepperl+Fuchs Solution Engineering Centers
|	**|**	**|**	**SP**	individual packaged spare part
ER	**.M**	**.ZP**		Example
Example: Mushroom button 40 mm, red, twist to release, labeled "NOT HALT EMERGENCY STOP", base-mounted contact block with 1x NO/1x NC contacts, emergency stop shroud, plastic, padlockable				

For configuration of operating elements, see tables on next page.

Pushbuttons and Emergency Stops

Pushbuttons Actuator Heads

Type	Color	Labeling	Image
CFP.PA	red	none	
CFP.PR	red	0	
CFP.PC	red	STOP	
CFP.PD	red	OFF	

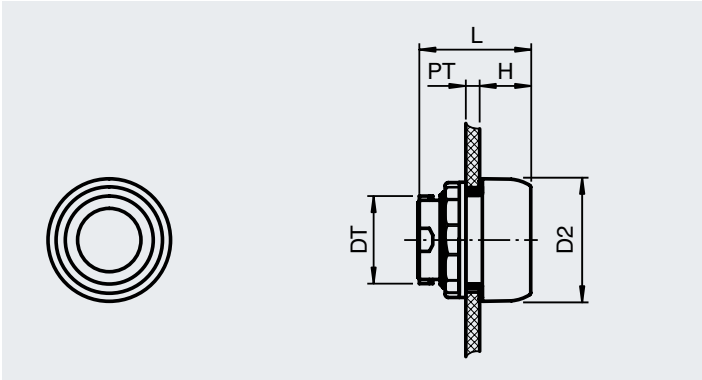

CFP.P*

Type	Color	Labeling	Image
CFP.PE	green	none	
CFP.PG	green	I	
CFP.PI	green	II	
CFP.PF	green	START	
CFP.PH	green	ON	
CFP.PY	yellow	none	
CFP.PO	amber	none	
CFP.PW	white	none	
CFP.PB	blue	none	
CFP.PJ	blue	RESET	
CFP.PK	black	none	
CFP.PL	black	0	
CFP.PN	black	I	
CFP.PP	black	II	
CFP.PQ	black	III	
CFP.PT	black	IV	
CFP.PU	black	arrow up	
CFP.PV	black	arrow down	
CFP.PZ*	see individual datasheets		

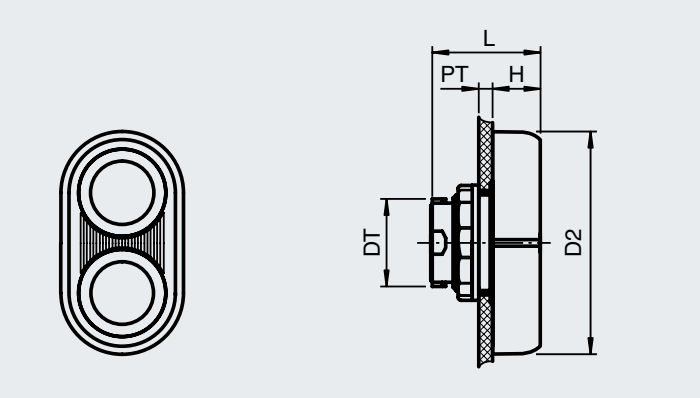

CFP.DM*

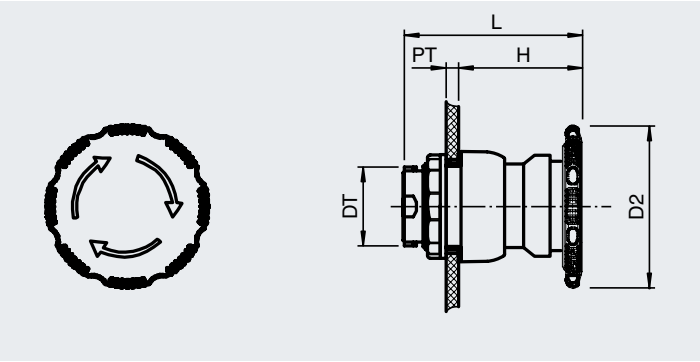

CFP.E*

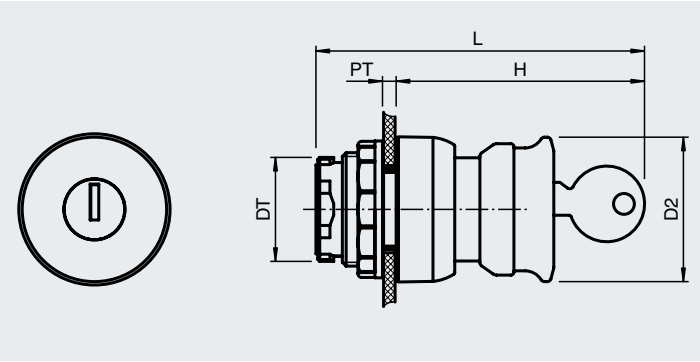

CFP.J*

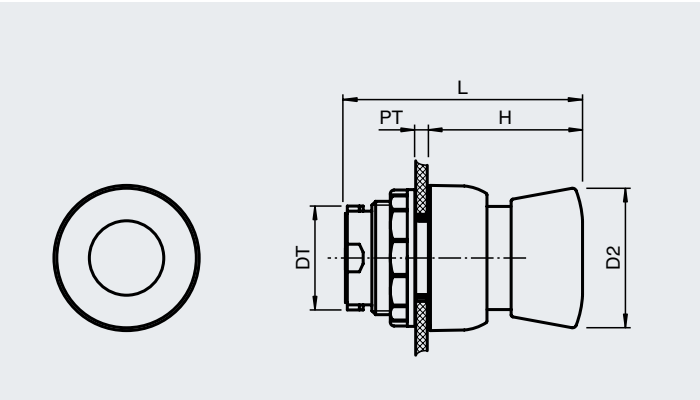

CFP.M*

Operating Elements (Ex e)

Emergency Stops Actuator Heads

Type	Function	Color	Labeling	Operator action	Actuator head diameter	Switching diagram	Image
CFP.E4	mushroom button	red	none	latching, twist to release	40 mm		
CFP.E5	mushroom button	red	none	latching, twist to release	55 mm		
CFP.JR	mushroom button	red	none	latching, key release	39 mm		

Other Pushbuttons Actuator Heads

Type	Function	Color	Labeling	Operator action	Actuator head diameter	Switching diagram	Image
CFP.DM	pushbutton	red/green	0 – I	spring return	70 mm x 39 mm		
CFP.MK	mushroom button	black	none	spring return	39 mm		
CFP.MR	mushroom button	red	none	spring return	39 mm		
CFP.MG	mushroom button	green	none	spring return	39 mm		

Pushbuttons and Emergency Stops—Dimensions

Type	Function	Actuator head diameter [mm]	Panel wall thickness [mm]	Diameter thru-hole [mm]	Length outside enclosure [mm]	Total length [mm]	Mass [g]
		D2	**PT**	**DT**	**H**	**L**	
CFP.P*	pushbutton	39	1 ... 6	30.6	15.5	35.4	25
CFP.DM*	double push-button	70 x 39	1 ... 6	30.6	15.5	35.4	38
CFP.E4	emergency stop	40	1 ... 6	30.6	41.2	60.7	52
CFP.E5	emergency stop	55	1 ... 6	30.6	41.2	60.7	58
CFP.JR	key release mush-room button	39	1 ... 6	30.6	49.5	70	65
CFP.M*	mushroom button	39	1 ... 6	30.6	41.2	60.7	46

Contact Blocks

Type	Mounting	Number of poles	Contact configu-ration	Switching diagram see overview	Image	Switching diagram	Image
CFP.M	base-mounted	2	1x NO/1x NC				
CFP.C	base-mounted	2	2x NC				
CFP.O	base-mounted	2	2x NO				
CFP.A	cover-mounted	2	1x NO/1x NC				
CFP.B	cover-mounted	2	2x NC				
CFP.D	cover-mounted	2	2x NO				

Contact Blocks—Dimensions

Mounting	External dimension [mm]			Mounting holes [mm]			Mounting brackets [mm]	DIN mounting rail receptacle [mm]	Mass [g]	Enclosure type
	A	**B**	**C**	**G**	**H**	**Diam. J**	**N**	**G3**		
base-mounted	63	33.4	50	52	18	4.2	8	35.6	68	LR*, GR.CS*, SR.CS*
cover-mounted	54	37	63	–	–	–	–	–	79	SR.CS*

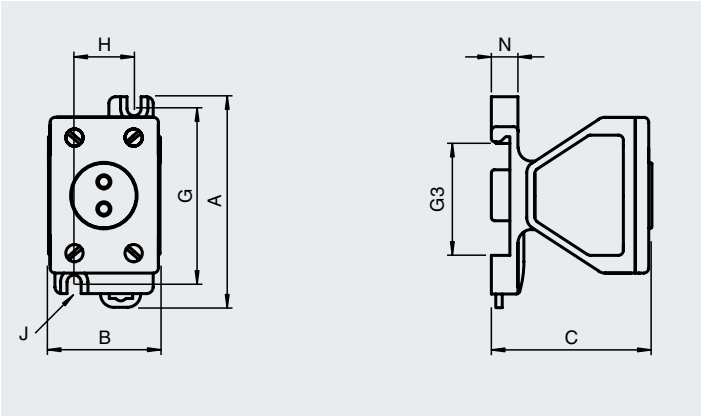

base-mounted

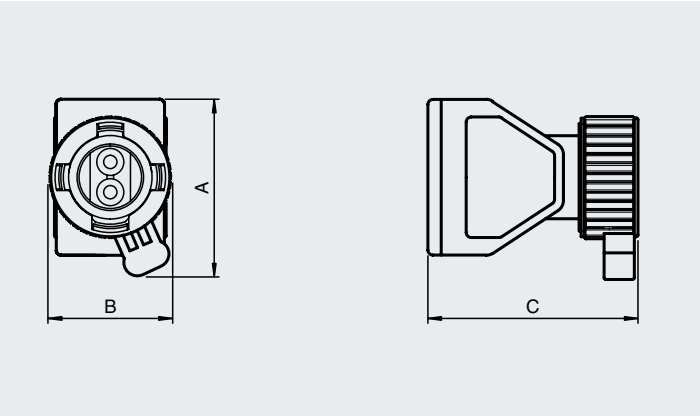

cover-mounted

Illuminated Pushbuttons

Illuminated Pushbuttons Actuator Heads

Type	Lens color	Operator action	Switching diagram	Image
CFP.IR	red	spring return		
CFP.IG	green	spring return		
CFP.IO	amber	spring return		
CFP.IW	white	spring return		
CFP.IB	blue	spring return		

LED Contact Modules

Type	Mounting	Operating voltage [max. V]	Contact configuration	Switching diagram	Image
CFP.I	base-mounted	250	1x NO		
CFP.J	base-mounted	250	1x NC		
CFP.K	cover-mounted	250	1x NO		
CFP.H	cover-mounted	250	1x NC		

Illuminated Pushbuttons Actuator Heads—Dimensions

Actuator head diameter [mm]	Panel wall thickness [mm]	Diameter thruhole [mm]	Length outside enclosure [mm]	Total length [mm]	Mass [g]	Mounting	Enclosure type
D2	**PT**	**DT**	**H**	**L**			
39	1 ... 6	30.6	17.5	36.8	21	use with base-mounted and cover-mounted contact modules	LR*, SR.CS*, GR.CS*

LED Contact Modules—Dimensions

Mounting	External dimension [mm]				Mounting holes [mm]			Mounting brackets [mm]	DIN rail receptacle [mm]	Mass [g]	Enclosure type
	A	**B**	**C**	**L**	**G**	**H**	**Diam. J**	**N**	**G3**		
base-mounted	63	33.4	47	82	52	18	4.2	8	35.6	72	LR*, GR.CS*, SR.CS*
cover-mounted	54	37	63	88	–	–	–	–	–	82	SR.CS*

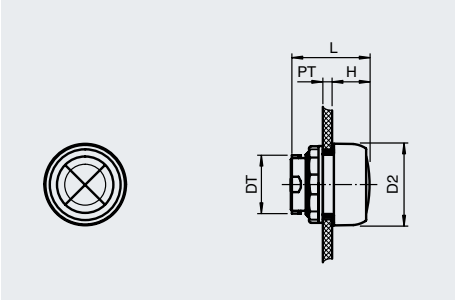

CFP.I*

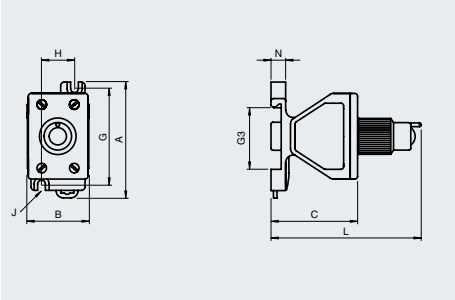

base-mounted

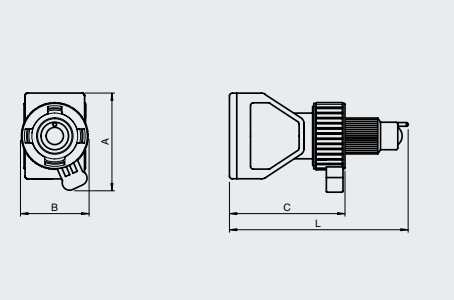

cover-mounted

Control Switches

Control Switch Actuator Heads

Type for use with LRP* and LRS*	Type for use with GR.CS* and SR.CS	Function	Diameter [mm]	Switching configuration	Switching diagram	Operator action	Labeling	Lockable	Image
CFP.N1	CFP.N6	rotary actuator	39	2 position changeover with left OFF		L - L	0 - I	-	
CFP.N2	CFP.N7	rotary actuator	39	2 position changeover		L - L	I - II	-	
CFP.N3	CFP.N8	rotary actuator	39	3 position changeover with center OFF		L - L - L	I - 0 - II	-	
CFP.N3S	CFP.N8S	rotary actuator	39	3 position changeover with center OFF		S - L - S	I - 0 - II	-	
CFP.N5	CFP.N9	rotary actuator	39	3 position changeover with left OFF		L - L - L	0 - I - II	-	
CFP.S1	CFP.S6	rotary actuator	60	2 position changeover with left OFF		L - L	0 - I	yes	
CFP.S2	CFP.S7	rotary actuator	60	2 position changeover		L - L	I - II	yes	
CFP.S3	CFP.S8	rotary actuator	60	3 position changeover with center OFF		L - L - L	I - 0 - II	yes	
CFP.S3S	CFP.S8S	rotary actuator	60	3 position changeover with center OFF		S - L - S	I - 0 - II	yes	
CFP.S5	CFP.S9	rotary actuator	60	3 position changeover with left OFF		L - L - L	0 - I - II	yes	
CFP.K1	CFP.K6	key switch rotary actuator	39	2 position changeover with left OFF		L - L	0 - I	yes	
CFP.K1S	CFP.K6S	key switch rotary actuator	39	2 position changeover with left OFF		L - S	0 - I	yes	
CFP.K3	CFP.K8	key switch rotary actuator	39	3 position changeover with center OFF		L - L - L	I - 0 - II	yes	
CFP.K3S	CFP.K8S	key switch rotary actuator	39	3 position changeover with center OFF		S - L - S	I - 0 - II	yes	

Operator action: L = latching, S = spring return
For combinations of actuator heads and contact blocks, please refer to individual datasheets of Control Units LRP* as well as Control Stations GR.CS* and SR.CS*. For further options, please contact Pepperl+Fuchs.

Actuator Heads—Dimensions

Type	Actuator head diameter [mm]	Panel wall thickness [mm]	Diameter thru-hole [mm]	Length outside enclosure [mm]	Total length [mm]	Mass [g]	Image example
	D2	PT	DT	H	L		
CFP.N*	39	1... 6	30.6	30.5	50.5	30	
CFP.S*	60	1... 6	30.6	30.5	50.5	46	
CFP.K*	39	1... 6	30.6	49.5	70	46	

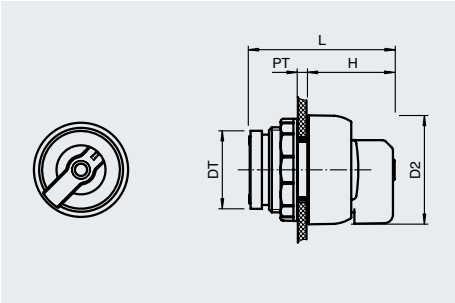

CFP.N*

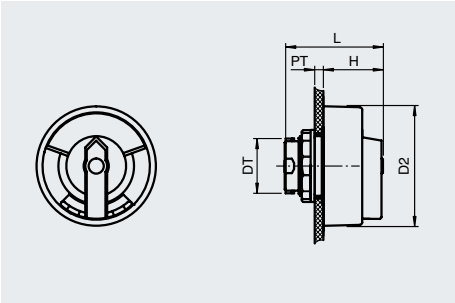

CFP.S*

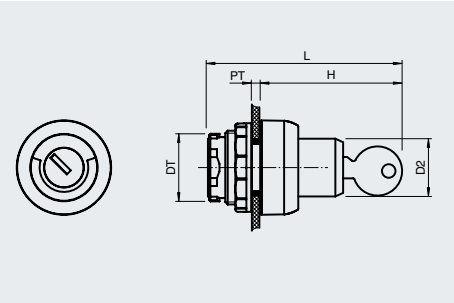

CFP.K*

2-Pole Contact Blocks

Type	Mounting	Number of poles	Contact configuration	Switching diagram see overview	Image
CFP.M	base-mounted	2	1x NO/1x NC		
CFP.C	base-mounted	2	2x NC		
CFP.O	base-mounted	2	2x NO		
CFP.A	cover-mounted	2	1x NO/1x NC		
CFP.B	cover-mounted	2	2x NC		
CFP.D	cover-mounted	2	2x NO		

Control Switches, 4-Pole Contact Blocks

4 Pole Contact Blocks for use with Actuator Heads S*

Types base-mounted for use with LRP*, LRS* and GR.CS*	Types cover-mounted for use with SR.CS	Number of poles	Contact configuration	Switching diagram	Image base-mounted
CFP.01	CFP.50	4	2x NO/2x NC	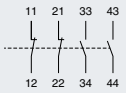	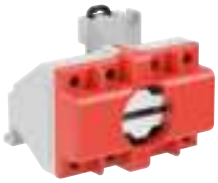
CFP.02	CFP.51	4	4x NC	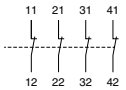	
CFP.03	CFP.52	4	4x NO	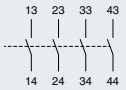	
CFP.04	CFP.53	4	1x NO/3x NC	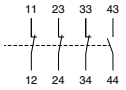	
CFP.05	CFP.54	4	3x NO/1x NC	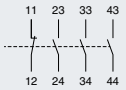	

For combinations of actuator heads and contact blocks, please refer to individual datasheets of Control Units LR* as well as Control Stations GR.CS* and SR.CS*. For further options, please contact Pepperl+Fuchs.

4-Pole Contact Blocks—Dimensions

Mounting	External dimension [mm]			Mounting holes [mm]			Mounting brackets [mm]	DIN mounting rail receptacle [mm]	Mass [g]	Enclosure type
	A	**B**	**C**	**G**	**H**	**Diam. J**	**N**	**G3**		
base-mounted	63	74	58.6	52	58	4.2	8	35.6	165	LR*, GR.CS*, SR.CS*
cover-mounted	57	73.4	65.7	–	–	–	–	–	168	SR.CS*

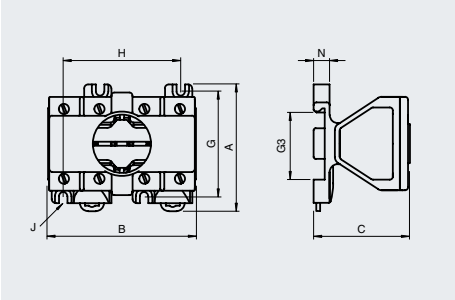

base-mounted

cover-mounted

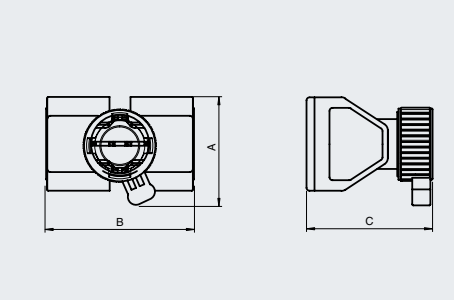

cover-mounted

Control Switches, 4-Pole Rotary Switching Blocks

Combination of 4-Pole Rotary Switching Blocks and Actuator Heads T*Heads S*

Switching configuration	Actuator (1)	Switching block base-mounted (1) + (2)	Actuator (2) (3)	Switching block cover-mounted (3)	Contacts	Switching diagram see overview	Operator action	Labeling	Lockable
2 position changeover, left OFF	T1	10	T6	60	4x NO	(10)	L - L	0 - I	yes
2 position changeover	T2	11	T7	61	2x NO/ 2x NC	(11)	L - L	I - II	–
2 position changeover	T2	17	T7	67	3x NO/ 1x NC	(17)	L - L	I - II	–
2 position changeover	T2	18	T7	68	1x NO/ 3x NC	(18)	L - L	I - II	–
3 position changeover, center OFF	T3	12	T8	62	4x NO	(12)	L - L - L	I - 0 - II	yes
3 position changeover, center OFF	T3	14	T8	64	4x NO	(14)	L - L - L	I - 0 - II	yes
3 position changeover, center OFF, both sides spring return	T3	13	T8	63	4x NO	(13)	S - L - S	I - 0 - II	yes
3 position changeover	T3	22	T8	72	4x NO	(22)	L - L - L	I - 0 - II	–
3 position changeover	T5	23	T0	73	4x NO	(23)	L - L - L	0 - I - II	–
3 position changeover, right spring return	T5	19	T0	69	2x NO/ 2x NC	(19)	L - L - S	0 - I - II	–
3 position changeover, right spring return	T5	16	T0	66	3x NO/ 1x NC	(16)	L - L - S	0 - I - II	–
4 position changeover	T4	15	T9	65	3x NO/ 1x NC	(15)	L - L - L - L	I - II - III - IV	–
4 position changeover, right spring return	T4	20	T9	70	4x NO	(20)	L - L - L - S	I - II - III - IV	–
4 position changeover	T4	21	T9	71	4x NO	(21)	L - L - L - L	I - II - III - IV	–

(1) for use with LR* (2) for use with GR.CS* (3) for use with SR.CS* Operator action: L = latching, S = spring return

4-Pole Contact Blocks—Dimensions

Mounting	External dimension [mm]			Mounting holes [mm]			Mounting brackets [mm]	DIN mounting rail receptacle [mm]	Mass [g]	Enclosure type
	A	**B**	**C**	**G**	**H**	**Diam. J**	**N**	**G3**		
base-mounted	63	74	72	52	58	4.2	8	35.6	171	(1) + (2)
cover-mounted	63	74	72	–	–	–	–	–	235	(3)

actuator head CFP.T*

base-mounted

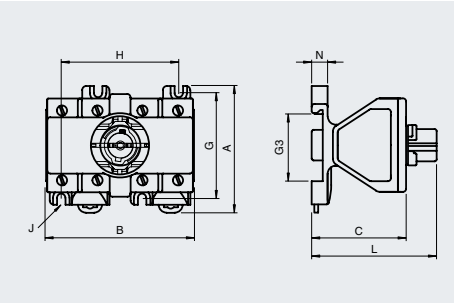

base-mounted

(10)

	13	23	33	43
0				
I	X	X	X	X
	14	24	34	44

(11)

	13	23	31	41
I			X	X
II	X	X		
	14	24	32	42

(12)

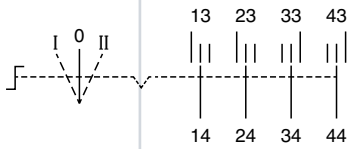

	13	23	33	43
I	X	X		
0				
II			X	X
	14	24	34	44

(13)

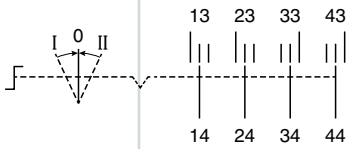

	13	23	33	43
I	X	X		
0				
II			X	X
	14	24	34	44

(14)

	13	23	33	43
I	X	X	X	X
0				
II	X	X	X	X
	14	24	34	44

(15)

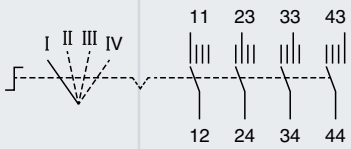

	11	23	33	43
I	X			
II		X		
III			X	
IV				X
	12	24	34	44

(16)

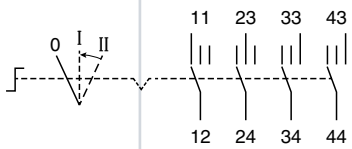

	11	23	33	43
0	X			
I		X		
II			X	X
	12	24	34	44

(17)

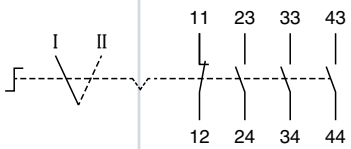

	11	23	33	43
I	X			
II		X	X	X
	12	24	34	44

(18)

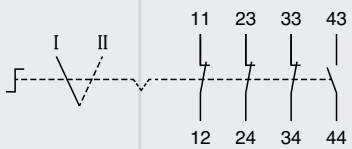

	11	23	33	43
I	X	X	X	
II				X
	12	24	34	44

(19)

	11	21	33	43
0	X	X		
I				
II			X	X
	12	22	34	44

(20)

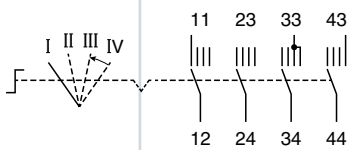

	11	23	33	43
I	X			
II				
III			X	
IV			X	X
	12	24	34	44

(21)

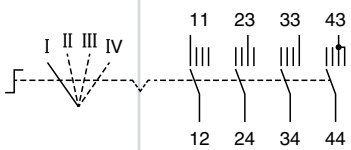

	11	23	33	43
I	X			
II				
III		X		X
IV			X	X
	12	24	34	44

(22)

	13	23	31	43
I	X		X	
0			X	
II	X	X		
	14	24	32	44

(23)

	13	23	33	43
0				
I	X		X	
II		X		X
	14	24	34	44

LED Indicators

Illuminated Pushbuttons Actuator Heads

Type	Lens color	Image
CFP.LR	red	
CFP.LG	green	
CFP.LO	amber	
CFP.LW	white	
CFP.LB	blue	

LED Contact Modules

Type	Mounting	Rated operating voltage [V AC/DC]	Image
CFP.NI	base-mounted	10 ... 28, Ex ia	
CFP.NE	base-mounted	10 ... 28	
CFP.L	base-mounted	20 ... 250	
CFP.P	base-mounted	250 ... 400	
CFP.GI	cover-mounted	10 ... 28, Ex ia	
CFP.GE	cover-mounted	10 ... 28	
CFP.R	cover-mounted	20 ... 250	
CFP.Q	cover-mounted	250 ... 400	

Illuminated Pushbuttons Actuator Heads—Dimensions

Actuator head diameter [mm]	Panel wall thickness [mm]	Diameter thruhole [mm]	Length outside enclosure [mm]	Total length [mm]	Mass [g]	Mounting	Enclosure type
D2	**PT**	**DT**	**H**	**L**			
39	1 ... 6	30.6	17.5	36.8	21	use with base-mounted and cover-mounted contact modules	LR*, SR.CS*, GR.CS*

LED Contact Modules—Dimensions

Mounting	External dimension [mm]				Mounting holes [mm]			Mounting brackets [mm]	DIN rail receptacle [mm]	Mass [g]	Enclosure type
	A	B	C	L	G	H	Diam. J	N	G3		
base-mounted	63	33.4	47	82	52	18	4.2	8	35.6	72	LR*, GR.CS*, SR.CS*
cover-mounted	54	37	63	88	–	–	–	–	–	82	SR.CS*

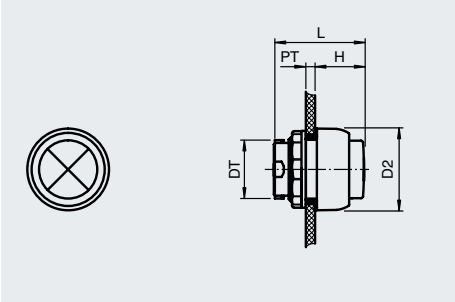

CFP.L*

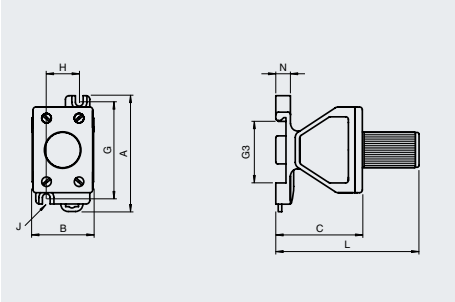

base-mounted

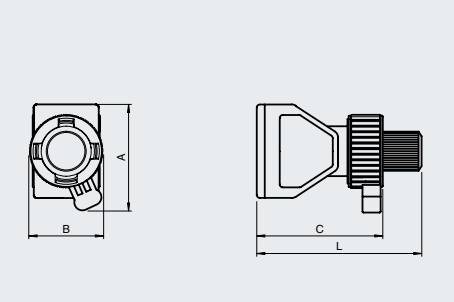

base-mounted

Potentiometers

Potentiometer Actuator Heads

Type	Enclosure type	Labeling	Image
CFP.R1	LR*	0 ... 10	
CFP.R2	SR.CS* GR.CS*	0 ... 10	

Potentiometer Modules

Type	Mounting	Range [kΩ]	Image
CFP.3	base-mounted	0 ... 0.5	
CFP.1	base-mounted	0 ... 1	
CFP.2	base-mounted	0 ... 2	
CFP.5	base-mounted	0 ... 5	
CFP.0	base-mounted	0 ... 10	
CFP.4	cover-mounted	0 ... 0.5	
CFP.6	cover-mounted	0 ... 1	
CFP.7	cover-mounted	0 ... 2	
CFP.8	cover-mounted	0 ... 5	
CFP.9	cover-mounted	0 ... 10	

Potentiometer Actuator Heads—Dimensions

Actuator head diameter [mm]	Panel wall thickness [mm]	Diameter thru-hole [mm]	Length outside enclosure [mm]	Total length [mm]	Mass [g]	Mounting	Enclosure type
D2	**PT**	**DT**	**H**	**L**			
39	1 ... 6	30.6	30.5	50.5	27	use with base-mounted and cover-mounted contact modules	LR*, SR.CS*, GR.CS*

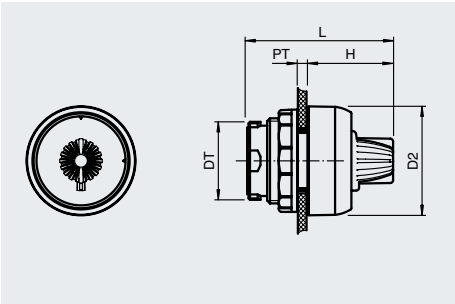

CFP.R*

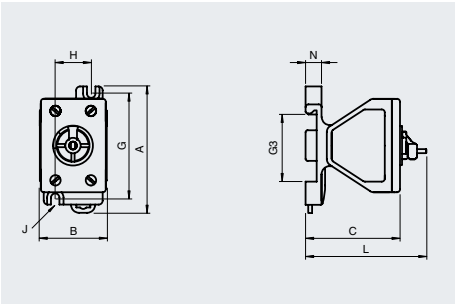

base-mounted

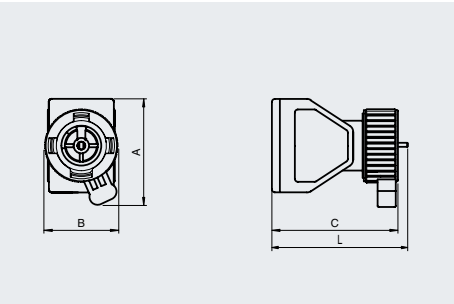

cover-mounted

Ammeters and Voltmeters

Ammeter Modules

Type	Rated operating current	Scales see table	Image
CFP.AA	0 ... 1 A	scale per specification	
CFP.AB	0 ... 5 A	scale per specification	
CFP.AC	0 ... 20 mA	scale 0 ... 20/40 mA	
CFP.AD	4 ... 20 mA	scale 4 ... 20/40 mA	

Ammeter Scales

Scales	Type Code	Scales	Type Code
0 ... 1/5 A	SA	**0 ... 100/500 A**	SL
0 ... 2.5/12.5 A	SB	**0 ... 150/750 A**	SM
0 ... 5/25 A	SC	**0 ... 200/1000 A**	SN
0 ... 10/50 A	SD	**0 ... 250/1250 A**	SO
0 ... 15/75 A	SE	**0 ... 300/1500 A**	SP
0 ... 20/100 A	SU	**0 ... 400/2000 A**	SQ
0 ... 25/125 A	SF	**0 ... 500/2500 A**	SR
0 ... 30/150 A	SG	**0 ... 600/3000 A**	SS
0 ... 40/200 A	SH	**0 ... 1000/5000 A**	ST
0 ... 50/250 A	SI	**Scale as per specification**	SZ
0 ... 60/300 A	SJ		
0 ... 75/375 A	SK		

Voltmeter Modules

Type	Rated operating voltage	Image
CFP.V6	0 ... 10 V	
CFP.V1	0 ... 25 V	
CFP.V2	0 ... 40 V	
CFP.V7	0 ... 50 V	
CFP.V8	0 ... 100 V	
CFP.V9	0 ... 120 V	
CFP.V3	0 ... 150 V	
CFP.V4	0 ... 250 V	
CFP.V5	0 ... 500 V	

Voltmeter Scales

included in module

Meter Window Mounting Kits

Type	Window including	Enclosure type
CFP.WB	base mounting kit	LR*, SR.CS*, GR.CS* SR.CS*
CFP.WL	cover mounting kit	SR.CS*

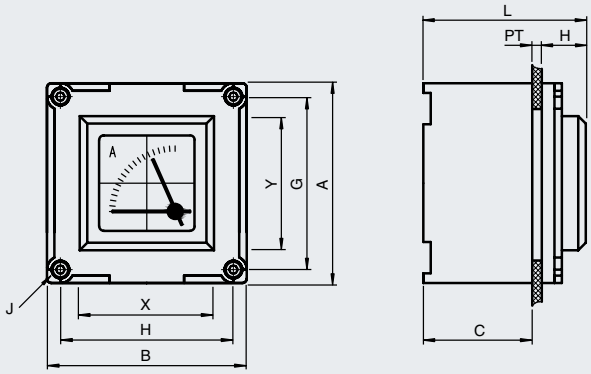

Ammeter and Voltmeter Modules—Dimensions

External dimension [mm]				Viewing window [mm]		Panel wall thickness [mm]	Mounting holes			Mass [g]	Enclosure type
A	B	C	L	X	Y	PT	G	H	Diam. J		
70	70	59	75	54	50	1 ... 6	63	63	3.5	186	LR*, SR.CS*, GR.CS*

Buzzer and Accessories

Potentiometer Actuator Heads

Type	Function	Color	Rated operating voltage [V AC/DC]	Image
CFP. BUZRF1	flashing buzzer	red	10 ... 28	
CFP. BUZRF2	flashing buzzer	red	20 ... 250	
CFP. BUZKS1	buzzer	black	10 ... 28	
CFP. BUZKS2	buzzer	black	20 ... 250	

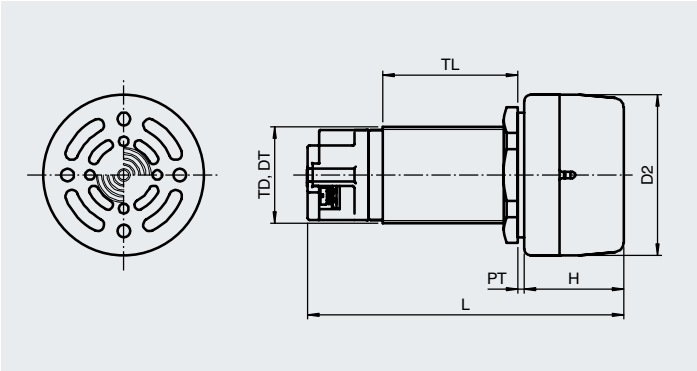

Buzzer—Dimensions

Actuator head diameter [mm]	Panel wall thickness [mm]	Diameter thru-hole [mm]	Length outside enclosure [mm]	Total length [mm]	Thread size	Thread length [mm]	Mass [g]	Mounting	Enclosure type
D2	**PT**	**DT**	**H**	**L**	TD	TL			
50	1 ... 35	30.6	31	98.5	M30 x 1.5	42	125	cover-mounted	LR*, SR.CS*, GR.CS*

Operating Elements Accessories

Type	Description	Image
CFP.BK	Blanking plug	
CFP.ZT	Narrow label holder for small actuators, with printed label as per specification	
CFP.ZS	Label holder for small actuators, with printed label as per specification	
CFP.ZL	Label holder for large actuators, with printed label as per specification	
CFP.TP	Locknut spanner, plastic	

Type	Description	Image
CFP.ZEB	Emergency stop label, yellow, round	
CFP. ZEB.V2	Emergency stop label, yellow, round, labeled	
CFP.ZB CFP.ZBR	Protective shroud for small actuators, plastic, padlockable	
CFP.ZJ CFP.ZJR	Protective shroud for pushbutton con-tinuous operation, plastic, padlockable	
CFP.ZH	Protective shroud for double pushbut-ton, stainless steel, padlockable	

Type	Description	Image
CFP.ZA CFP.ZAR	Protective lid, plastic	
CFP.ZP CFP.ZPR	Emergency stop shroud, plastic, padlockable	
CFP.ZDT	Protective shroud, stainless steel	
CFP.ZCT	Protective shroud, stainless steel, padlockable	

Technical Data Overview (1/2)

Actuator Heads, Contact Blocks, LED Contact Modules

Technical Data		Actuator heads	Contact blocks	LED contact modules
Electrical specifications	Operating voltage	–	250 V max.	250 V max.
	Operating current	–	16 A max.	10 A max.
	Power consumption	–	–	1 W
	Terminal capacity	–	2.5 mm^2	
	Terminal torque	–	0.8 Nm	
	Usage category	–	AC12: 12 ... 250 V AC – 16 A DC13: 20 ... 110 V DC – 1 A AC15: 20 ... 250 V AC – 10 A	AC15: 20 ... 250 V AC – 10 A
Mechanical specifications	Mechanical life	–	1000000 switching operations	
	Degree of protection	IP66	IP20	IP20
Material	Housing	Polyamide (PA)		
	Washer gasket	silicone	–	–
Ambient conditions	Ambient temperature	–40 ... 55 °C (–40 ... 131 °F)	–	–
	Service temperature	–40 ... 65 °C (–40 ... 149 °F)	–40 ... 90 °C (–40 ... 194 °F)	–55 ... 85 °C (–67 ... 185 °F)
Data for application in connection with hazardous areas	EU-Type Examination Certificate			
	Marking	Ex II 2 GD Ex e IIC Gb Ex tb IIIC Db	Ex II 2 G Ex de IIC Gb	
International approvals	IECEx approval	IECEx CML 16.0114U		
Conformity	Degree of protection		EN 60529	
	Usage category	–	IEC/EN 60947	IEC/EN 60947
	CE marking		0102	
General information	EC-Type Examination Certificate, Statement of Conformity, Declaration of Conformity, Attestation of Conformity and instructions have to be observed where applicable. For information see www.pepperl–fuchs.com.			

Types Allocation

CFP components	base-mounted	cover-mounted
Contact blocks 2 pole	C, M, O	A, B, D
Contact blocks 4 pole	01 ... 05	50 ...54
Contact blocks 4 pole rotary	10 ... 23	60 ... 73
LED contact modules	I, J	H, K
LED modules Ex i	NI	GI
LED modules	NE, L	GE, R
Potentiometer modules	0, 1, 2, 3, 5	4, 6, 7, 8, 9
Ammeters	–	AA, AB, AD, AE
Voltmeters	–	V1 ... V9
Buzzer	–	BUZRF1, BUZRF2, BUZKS1, BUZKS2

Technical Data Overview (2/2)

LED and Potentiometer Modules, Ammeters, Voltmeters, Buzzer

Technical Data		LED modules Ex i	LED modules	Potentiometer modules	Ammeters	Voltmeters	Buzzer
Electrical specifications	Operating voltage	28 V max.	400 V max.	200 V max.	500 V AC	500 V AC	250 V max.
	Operating current	–	–	–	10 A max.	–	–
	Power consumption	2 W max.	2 W max.	0.1 W max.	–	–	1 W max.
	Accuracy class	–	–	–	1.5	1.5	–
	Terminal capacity	2.5 mm^2					
	Terminal torque	0.8 Nm					
Mechanical specifications	Degree of protection	IP20	IP20	IP20	IP66	IP66	IP66
Material	Housing	Polyamide (PA)					
Ambient conditions	Ambient temperature	–	–	–	–	–	–40 ... 55 °C (–40 ... 131 °F)
Data for application in connection with hazardous areas	EU–Type Examination Certificate	CML 16 ATEX 3339U					
	Marking	Ex II 2 G, Ex de IIC Gb					Ex II 2 GD, Ex eb ib mb IIC Gb, Ex ib tb IIIC Db
	Marking intrinsically safe versions	Ex II 1 G Ex ia IIC Ga	–	–	–	–	–
	Voltage Ui	28 V					
	Current Ii	93 mA					
	Power Pi	0.651 W					
	Internal capacitance Ci	0 µF					
	Internal inductance Li	0 mH					
International approvals	IECEx approval	IECEx CML 16.0114U					
Conformity	Degree of protection	EN 60529					
	CE marking	0102					
General information	EC-Type Examination Certificate, Statement of Conformity, Declaration of Conformity, Attestation of Conformity and instructions have to be observed where applicable. For information see www.pepperl–fuchs.com.						

Panel Mount Control Units (PM*.*.*)

Features

- Customizable configuration of operators and contact modules as per specification
- Ex eb db and Ex tb certified
- Full equipment certified
- Polyamide housing for panel mount
- Installation in Zones 1/21 and 2/22
- M20 cable gland integrated in protective cover
- IP66 rated

Function

PM* series control units are available as standard off-the-shelf control units or can be flexibly equipped with a wide variety of operators and contact configurations. With a comprehensive range of control functions, each control unit can be configured to meet the requirements of any application and ensure optimal use of space.

The enclosures are manufactured from polyamide and allow easy installation in appropriate industrial panels and enclosures. Each unit is individually certified as full equipment.

Durable materials and high-quality components allow the control units to be used in ambient temperatures between –40 °C and +50 °C.

Technical Data		
Electrical specifications	Operating voltage	250 V max.
	Operating current	16 A max.
Mechanical specifications	Dimensions	see data table
	Covering	Protective cover, fully detachable
	Number of cable entries	1x M20 cable gland in protective cover
	Degree of protection	IP66
Material	Housing	Polyamide (PA)
	Finish	Inherent color black
	Seal	Silicone
Ambient conditions	Ambient temperature	–40 ... 50 °C (–40 ... 122 °F)
Data for application in connection with hazardous areas	EU-Type Examination Certificate	CML 16 ATEX 3106X
	Marking	Ⓔx II 2 GD Ex de IIC T6 Gb, Ex tb IIIC T80 °C Db
International approvals	IECEx approval	IECEx CML 16.0046X

For further technical data, please refer to individual datasheets.

Legend

1 Cable Gland
2 Protective cover
3 Contact module
4 Bayonet catch
5 Locknut
6 Panel/enclosure wall
7 Flat gasket
8 Actuator head

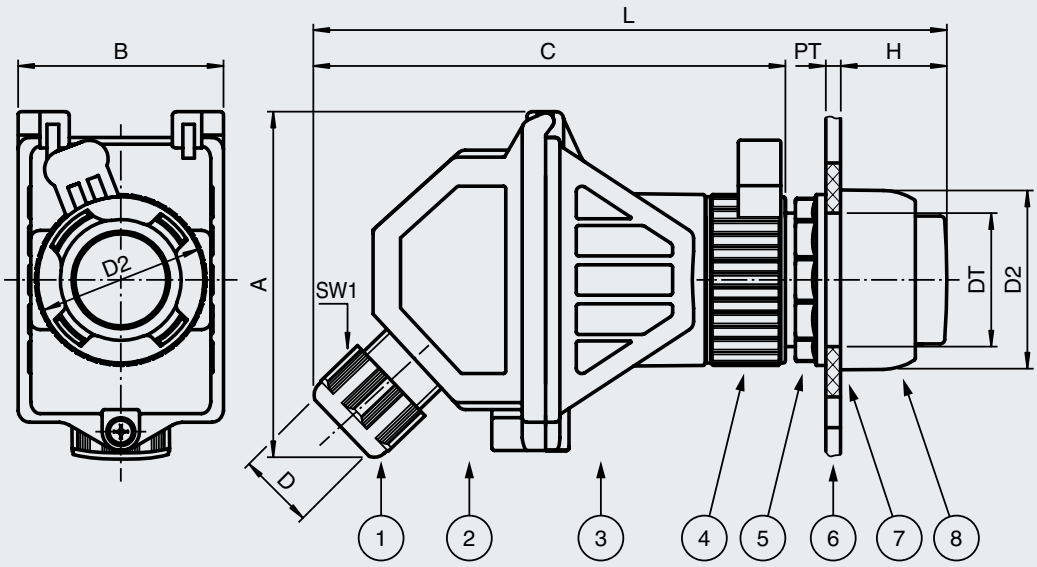

For more information, visit:

Dimensions and Enclosure Details	Function	Actuator head diameter [mm]	Length outside enclosure [mm]	Total length [mm]	Height [mm]	Width [mm]	Depth [mm]	Diameter thru-hole [mm]	Panel wall thickness [mm]	Image example
Type		D2	H	L	A	B	C	DT	PT	
PMP.P*	pushbutton	39	15.5	128	77	44	105	30.6	1... 6	
PMP.D*	double pushbutton	70 x 39	15.5	128	77	44	105	30.6	1... 6	
PMP.E4*	mushroom button 40 mm	40	41.8	153.7	77	44	105	30.6	1... 6	
PMP.E5*	mushroom button 55 mm	55	41.8	153.7	77	44	105	30.6	1... 6	
PMP.J*	mushroom button key release	39	41.6	154.1	77	44	105	30.6	1... 6	
PMI.I*	illuminated pushbutton	39	17.5	130	77	44	105	30.6	1... 6	
PMS.N*	control switch, small	39	30.6	143.1	77	44	105	30.6	1... 6	
PMS.K*	key switch	39	33.3	145.8	77	44	105	30.6	1... 6	
PML.L*	LED indi-cator	39	23.6	136.1	77	44	105	30.6	1... 6	
PMR.R*	potentiom-eter	39	30.5	143	77	44	105	30.6	1... 6	

Mass is valid for empty enclosure, it will increase according to integrated components and cable glands.

Control Units (Ex e)

Standard Variants, Pushbuttons and Emergency Stop Buttons

Type	Function	Color	Labeling	Operator action	Number of poles	Contact configura-tion	Switching configura-tion	Switching diagram	Usage category
PMP. PZ1.C.02	pushbutton	selection of red, green, amber, white, blue, black	–	spring return	2	2x NC	–		AC12 – 12 ... 250 V AC – 16 A AC15 – 12 ... 250 V AC – 10 A DC13 – 12 ... 110 V DC – 1 A DC13 – 12 ... 24 V DC – 1A
PMP. PZ1.C.11	pushbutton		–	spring return	2	1x NO/1x NC	–	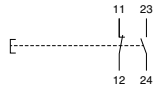	
PMP. PZ1.C.20	pushbutton		–	spring return	2	2x NO	–		
PMP. DZ3.C.02	double pushbutton	selection of red '0', green 'I', black 'I', blue 'RESET', white, amber	–	spring return	2	2x NC	–	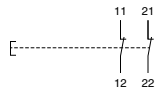	AC12 – 12 ... 250 V AC – 16 A AC15 – 12 ... 250 V AC – 10 A DC13 – 12 ... 110 V DC – 1 A DC13 – 12 ... 24 V DC – 1A
PMP. DZ3.C.11	double pushbutton		–	spring return	2	1x NO/1x NC	–	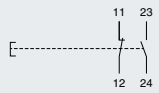	
PMP. DZ3.C.20	double pushbutton		–	spring return	2	2x NO	–	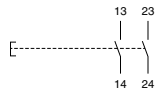	
PMP. E4.C.02	mushroom button 40 mm	red	–	latching, twist to release	2	2x NC	–	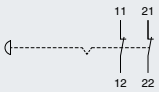	AC12 – 12 ... 250 V AC – 16 A AC15 – 12 ... 250 V AC – 10 A DC13 – 12 ... 110 V DC – 1 A DC13 – 12 ... 24 V DC – 1A
PMP. E4.C.11	mushroom button 40 mm	red	–	latching, twist to release	2	1x NO/1x NC	–	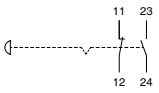	
PMP. E5.C.02	mushroom button 55 mm	red	–	latching, twist to release	2	2x NC	–	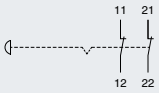	
PMP. E5.C.11	mushroom button 55 mm	red	–	latching, twist to release	2	1x NO/1x NC	–	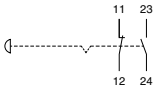	
PMP. JR.C.02	mushroom button	red	–	latching, key release	2	2x NC	–		
PMP. JR.C.11	mushroom button	red	–	latching, key release	2	1x NO/1x NC	–	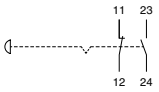	

Standard Variants, LED Indicators

Type	Function	Color	Labeling	Operator action	Number of poles	Contact configuration	Switching configuration	Rated operating voltage
PML.LR.L.W.2	LED indicator	red	–	–	–	–	–	12 ... 250 V AC 12 ... 24 V DC
PML.LG.L.W.2	LED indicator	green	–	–	–	–	–	
PML.LO.L.W.2	LED indicator	amber	–	–	–	–	–	
PML.LW.L.W.2	LED indicator	white	–	–	–	–	–	
PML.LB.L.W.2	LED indicator	blue	–	–	–	–	–	

Standard Variants, Illuminated Pushbuttons and Control Switches

Type	Function	Color	Labeling	Operator action	Number of poles	Contact configuration	Switching configuration	Switching diagram	Usage category
PMI. IR.I.W.01	illuminated pushbutton	red	–	spring return	1	1x NC	–	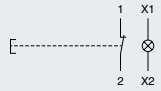	AC15 – 12 ... 250 V AC – 10 A DC13 – 12 ... 24 V DC – 1 A
PMI. IR.I.W.10	illuminated pushbutton	red	–	spring return	1	1x NO	–	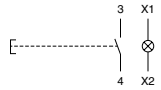	
PMI. IG.I.W.01	illuminated pushbutton	green	–	spring return	1	1x NC	–	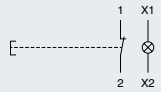	
PMI. IG.I.W.10	illuminated pushbutton	green	–	spring return	1	1x NO	–	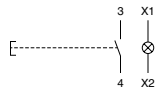	
PMS. N6.C.20	control switch, small	black	0 – I	engage – engage	2	2x NO	2 position changeover with left OFF	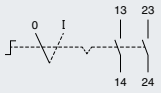	AC12 – 12 ... 250 V AC – 16 A AC15 – 12 ... 250 V AC – 10 A DC13 – 12 ... 110 V DC – 1 A DC13 – 12 ... 24 V DC – 1A
PMS. N7.C.11	control switch, small	black	I – II	engage – engage	2	1x NO/1x NC	2 position changeover	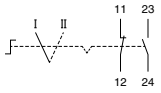	
PMS. N8.C.20	control switch, small	black	I – O – II	engage – engage – engage	2	2x NO	3 position changeover with center OFF	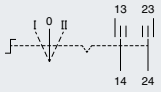	
PMS. N9.C.11	control switch, small	black	0 – I – II	engage – engage – engage	2	1x NO/1x NC	3 position changeover with left OFF	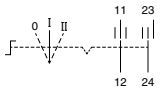	
PMS. K6.C.11	key switch	black/silver	0 – I	engage – engage	2	1x NO/1x NC	2 position changeover with left OFF	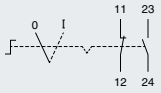	
PMS. K6.C.20	key switch	black/silver	0 – I	engage – engage	2	2x NO	2 position changeover with left OFF	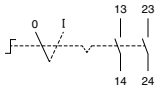	
PMS. K8.C.20	key switch	black/silver	I – 0 – II	engage – engage – engage	2	2x NO	3 position changeover with center OFF	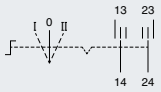	

Standard Variants, Potentiometers

Type	Function	Color	Labeling	Operator action	Number of poles	Contact configuration	Switching configuration	Range
PMR.R2.P.0.5K	potentiometer	black	0 ... 10	continuously rotary	–	–	–	0 ... 0.5 kΩ
PMR.R2.P.1K	potentiometer	black	0 ... 10	continuously rotary	–	–	–	0 ... 1 kΩ
PMR.R2.P.2K	potentiometer	black	0 ... 10	continuously rotary	–	–	–	0 ... 2 kΩ
PMR.R2.P.10K	potentiometer	black	0 ... 10	continuously rotary	–	–	–	0 ... 10 kΩ

Control Units

Several series of flameproof control units are available for the operation and monitoring of circuits and machinery in harsh or hazardous environments. The FW series is Ex d IIB certified and can hold one operator whereas the FC4/5 series is Ex d IIC certified and can hold up to four operators. Multiple control functions are available such as push buttons, LED status indicators, and control switches. The control units are manufactured from copper-free aluminum, which provides optimal protection from most environmental hazards.

FW—Aluminum

FW series control units are Ex d IIB certified and can be configured with one operating element that covers various contact configurations. The devices have standard cable entry positions on all sides. All enclosure types are manufactured from marine-grade aluminum.

FC—Aluminum

FC series control units are Ex d IIC and Ex tD A21 certified. They can be configured with one to four operating elements that cover various contact configurations. FC4 versions have standard cable entry positions while the FC5 allows entry customization to meet any specific requirements. All enclosure types are manufactured from marine-grade aluminum.

For more information, visit
pepperl-fuchs.com/pf-controlunits-exd

Control Units (Ex d IIB) in Aluminum (FW* LCU)

Features

- Aluminum enclosure
- Ex d certified
- Installation in Zone 1, Zone 2
- Gas group IIB
- Customizable configuration of operators and cable gland types as per specification
- IP66 rated

Function

The FW series control units are Ex d IIB certified and can be flexibly configured with one operating element that covers various contact configurations. The devices have standard cable entry positions on all sides. All enclosure types are manufactured from marine-grade aluminum.

Technical Data		
Electrical specifications	Operating voltage	240 V AC max.
	Operating current	see data table
Mechanical specifications	Dimensions	see data table
	Enclosure cover	detachable
	Cover seal	nitrile O-ring
	Degree of protection	IP66
Material	Enclosure	Aluminum alloy
	Finish	epoxy coated RAL 7032
Ambient conditions	Ambient temperature	–20 ... 60 °C (–4 ... 140 °F)
Data for application in connection with hazardous areas	EU-Type Examination Certificate	SIRA 07 ATEX 1132X
	Marking	Ex II 2 G Ex d IIB T*, T6 @ Ta +60 °C
International approvals	EAC approval	IECEx TSA 07.0005X

For further technical data, please refer to individual datasheets.

Operating Elements Overview

Type	Description
FWI-1	Pushbutton recessed actuator (Specify color & contact block requirements)
FWI-2	Pushbutton projecting actuator (Specify color & contact block requirements)
FWI-3	Pushbutton mushroom head twist to reset (Specify contact block requirements)
FWI-4	Pushbutton mushroom head key to reset (Specify contact block requirements)
FWI-5	Key operated pushbutton (Specify contact block requirements)
FWI-6	Pushbutton mushroom head pull to reset padlockable (Specify contact block requirements)
FWI-8	Pushbutton mushroom head (Specify contact block requirements)

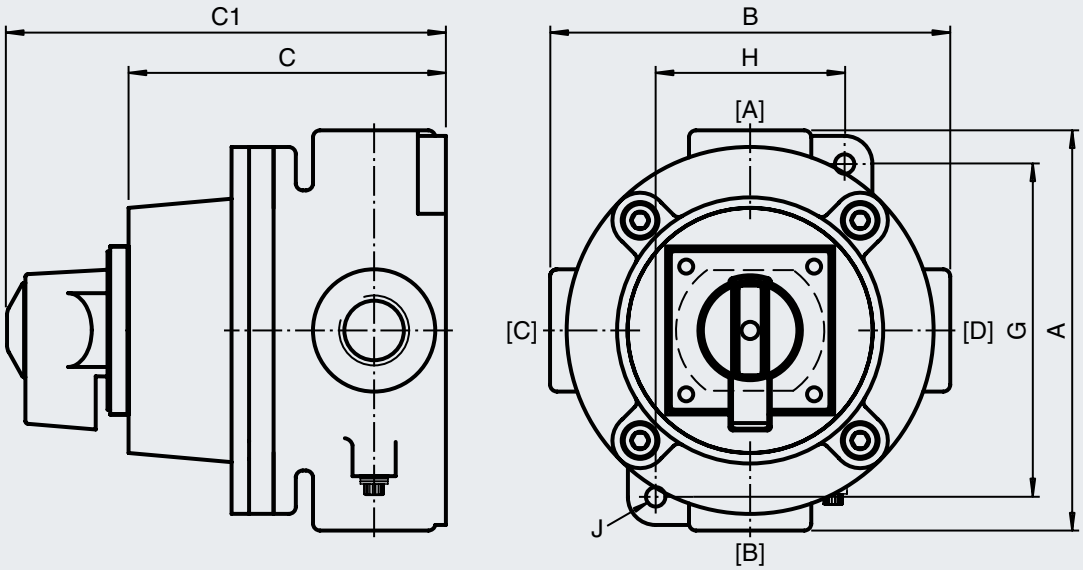

See data table for dimension values. Image and drawing are generic for this device type and may deviate from the specific version.

For more information, visit:

Dimensions and Enclosure Details	External dimensions [mm]				Mounting [mm]			Cable Entries			Terminals	
Type	A	B	C	C1	G	H	J	Faces A+B M20	Faces C+D M20	Torque [Nm]	Capacity [mm²]	Torque [Nm]
FWI-1	114	114	91	108	54	95	7	1x metric ISO pitch 1.5	1x Stop-ping Plug	see datasheets of stopping plugs	1.5	1.2
FWI-3	114	114	91	133	54	95	7				1.5	1.2
FWI-6	114	114	91	133	54	95	7				1.5	1.2
FWI-8	114	114	91	133	54	95	7				1.5	1.2
FW210	114	114	60	126	54	95	7				2.5	0.8
FW220	114	114	60	126	54	95	7				2.5	0.8

Functions

Type	Function	Color	Labeling	Operator action	Number of poles	Contact configu-ration	Switching configura-tion	Switching diagram	Usage category
FWI-1	pushbutton	green	none	spring return	2	1x NO/1x NC	–	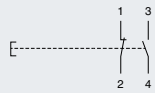	AC15: 240 V AC - 3 A AC15: 120 V AC - 6 A DC13: 250 V DC - 0.27 A DC13: 125 V DC - 0.55 A
FWI-3	mushroom button	red	EMERGENCY STOP	latching, twist to release	2	1x NO/1x NC	–	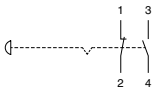	
FWI-6	mushroom button	red	EMERGENCY STOP	latching, pull to release	2	1x NO/1x NC	–	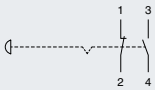	
FWI-8	mushroom button, lockable	red	none	spring return	2	1x NO/1x NC	–	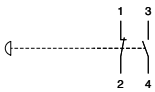	
FW210	control switch, small	black	1 – OFF – 2	engage – engage – engage	1	1x CO	3 position changeover with center OFF	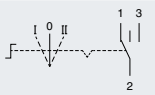	AC15: 12 ... 250 V AC - 5 A AC21A: 12 ... 250 V AC - 20 A DC13: 12 ... 110 V DC - 1 A DC13: 12 ... 24 V DC - 20 A
FW220	control switch, small	black	1 – 2	engage – engage	1	1x CO	2 position changeover	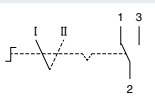	

Control Units (Ex d IIC) in Aluminum (FC* LCU)

Features

- Aluminum enclosure
- Ex d and Ex tD certified
- Installation in Zones 1/21 and 2/22
- Gas group IIC
- Customizable configuration of operators, cable entry quantities, and cable gland types as per specification
- IP66 rated

Function

The FC series control units are Ex d IIC and Ex tD A21 certified. They can be flexibly configured with one to four operating elements that cover various contact configurations. FC4 versions have standard cable entry positions while FC5 allows entry customization to meet any specific requirements. All enclosure types are manufactured from marine-grade aluminum.

Technical Data		
Electrical specifications	Operating voltage	see data table
	Operating current	see data table
Mechanical specifications	Dimensions	see data table
	Enclosure cover	detachable
	Cover seal	chloroprene
	Degree of protection	IP66
Material	Enclosure	Aluminum alloy
	Finish	epoxy coated RAL 7032
Ambient conditions	Ambient temperature	–20 ... 60 °C (–4 ... 140 °F)
Data for application in connection with hazardous areas	EU-Type Examination Certificate	SIRA 07 ATEX 1133X
	Marking	Ex II 2 GD Ex d IIC T* Gb, Ex tD A21, T6/T80 °C @ Ta +60 °C
International approvals	IECEx approval	IECEx SIM 07.0001X

For further technical data, please refer to individual datasheets.

Dimensions and Enclosure Details	External dimension [mm]				Mounting holes [mm]			Cable Entries			Terminals	
Type	A	B	C	C1	G	H	J	Faces A+B M20	Faces C+D M20	Torque [Nm]	Capacity [mm²]	Torque [Nm]
FC4J-1-1	152	152	90	107	50	130	7	1x metric ISO pitch 1.5 mm	1x Stopping Plug	see data-sheets of stopping plugs	1.5	0.8
FC4J-1-2	152	152	90	112	50	130	7				1.5	0.8
FC4J-1-3	152	152	90	131	50	130	7				1.5	0.8
FC4J-1-8	152	152	90	131	50	130	7				1.5	0.8
FC4A-211	152	152	80	131	50	130	7				2.5	0.8
FC4A-221	152	152	80	131	50	130	7				2.5	0.8

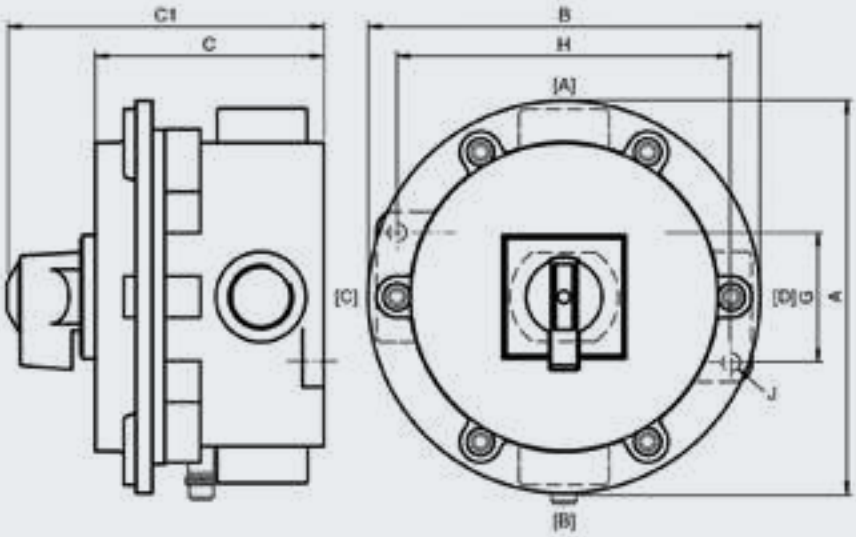

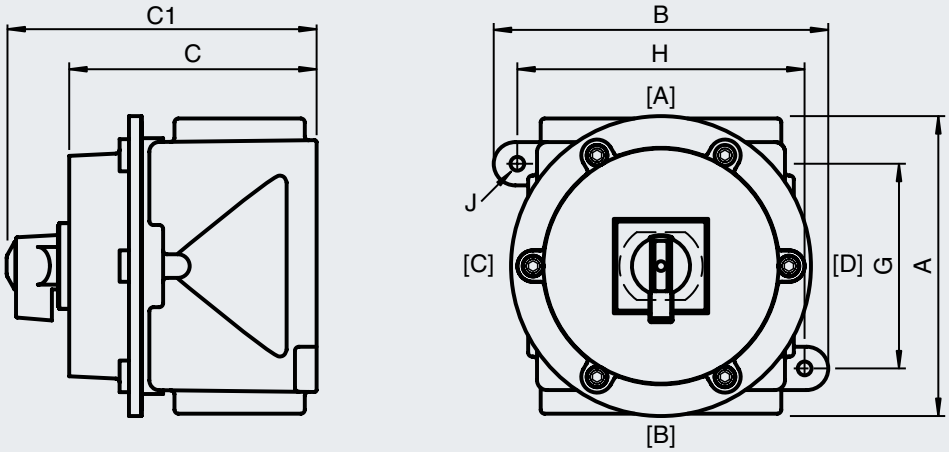

upper drawing: FC4*, lower drawing: FC5*

See data table for dimension values. Image and drawing are generic for this device type and may deviate from the specific version.

For more information, visit:

Functions Overview

Type Code	Description
FC4A	CA10 switch
FC4A-SS	Sail switch
FC4A-FS	Float switch
FC4B	CA20B switch
FC4C	C26 switch
FC4D	Switch (CA10 to C26) + 1 pushbutton
FC4E	Switch (CA10) + 2 push buttons
FC4F	Switch (CA10 to C26) + 1 pilot light
FC4G	Switch (CA10) + 2 pilot lights
FC4H	Switch (CA10) + 1 pushbutton + 1 pilot light
FC4I-Q	Break glass alarm station
FC4I	Single pushbutton
FC4-BELL	6" bell 25 V DC or 240 V AC
FC4J	2 push buttons

Type Code	Description
FC4K	3 push buttons
FC4L	1 pushbutton + 1 pilot light
FC4M	2 push buttons + 1 pilot light
FC4N	1 pushbutton + 2 pilots
FC4O	1 pilot light
FC4P	2 pilot lights
FC4R	3 pilot lights
FC4S	2 × switches (CA10)
FC4T	Thermostat
FC4TC	Thermostat/2.5 kW element
FC4U	C32 switch (style 7 only)
FC4V	C42 switch (style 7 only)
FC4X	Combination of 4 push buttons (style 6 only)
FC4Z	Combination of push buttons and pilot lights (style 6 only)

Control Units (Ex d)

Functions

Type	Function	Color	Labeling	Operator action	Number of poles	Contact configu-ration	Switching configura-tion	Switching diagram	Usage category
FC4J-1-1	pushbutton, flush	green	none	spring return	2	1x NO/1x NC	–	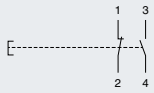	AC15: 240 V AC – 3 A AC15: 120 V AC – 6 A DC13: 250 V DC – 0.27 A DC13: 125 V DC – 0.55 A
	pushbutton, flush	red	none	spring return	2	1x NO/1x NC	–	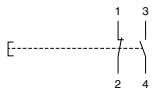	
FC4J-1-2	pushbutton, flush	green	none	spring return	2	1x NO/1x NC	–	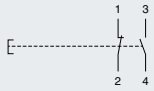	
	pushbutton, raised	red	none	spring return	2	1x NO/1x NC	–	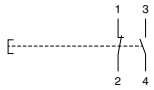	
FC4J-1-3	pushbutton, flush	green	none	spring return	2	1x NO/1x NC	–		
	mushroom button	red	none	latching, twist to release	2	1x NO/1x NC	–	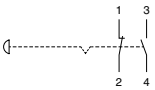	
FC4J-1-8	pushbutton, flush	green	none	spring return	2	1x NO/1x NC	–	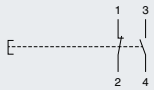	
	mushroom button	red	none	spring return	2	1x NO/1x NC	–	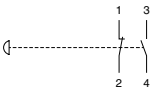	
FC4A-211	control switch, small	black	1 – OFF – 2	engage – engage – engage	2	2x CO	3 position changeover with center OFF	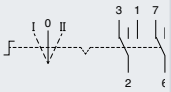	AC15: 12 ... 250 V AC – 5 A AC21A: 12 ... 250 V AC – 20 A DC13: 12 ... 110 V DC – 1 A DC13: 12 ... 24 V DC – 20 A
FC4A-221	control switch, small	black	1 – 2	engage – engage	2	2x CO	2 position changeover	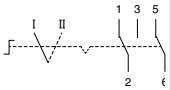	

For details, please refer to individual product datasheet. For further configurations, please contact Pepperl+Fuchs.

Control Units (Ex d)

Operating Elements Overview

Type Code	Description
MN1	Recessed actuator
MN2	Projecting actuator
MN3	Mushroom head twist to release (emergency stop)
MN4	Mushroom head key to reset (emergency stop)
MN5	Key operated pushbutton
MN6	Mushroom head pull to reset padlockable (emergency stop)
MN7	Module blanking plug (used for spares)
MN8	Mushroom actuator momentary
MN8A	Large mushroom head black actuator momentary
MN11	LED pilot light
MN13	Potentiometer

Control Stations

For efficient operation and monitoring of multiple circuits and machinery in hazardous areas, control stations can be tailored to meet the exact requirements of an application. They are based on glass fiber reinforced polyester and stainless steel enclosures, and certified according to Ex e, Ex ib, and Ex tb explosion protection. A variety of operating elements, including various contact configurations and cable entry options, allow each control station to be adapted to specific requirements. Up to 81 operating elements can be integrated in a single control station depending on enclosure design.

GR.CS—Glass Fiber Reinforced Polyester

The GR.CS* series comprises a range of control stations ready to be equipped with a wide array of monitoring and control functions. The range of enclosure sizes can fit over 60 operating elements. With a 10 mm design grid, risers for varying mounting depths, and a special gridded DIN mounting rail for precise positioning of operator elements, these control stations can be easily tailored to different application requirements.

SR.CS—Stainless Steel

The newly designed SR series with brushed finish is a flexible range of control stations that are fully customizable. Enclosures can meet the needs of user specifications by being supplied with or without accessories such as concealed cover hinges, removable mounting brackets or gland plates. The control stations can be optionally equipped with lid sercurity hasps or 1/4 turn keyl locks.
A comprehensive range of operating elements, contact blocks, terminals, entry devices and enclosure accessories are available to ensure each configuration will exactly meet any application requirements.

DS*—Stainless Steel

Enclosures from the DS series are used as interface cabinets, control stations, and terminal boxes. The enclosures are manufactured from painted and unpainted stainless steel with either a bolt-on or hinged cover and hexagon head screws or quarter turn locks respectively. The enclosures may be fitted with separately certified operating elements such as push buttons, control switches, indicators, and other equivalent separately certified devices. Round and square viewing windows are available for integrated equipment monitoring.

For more information, visit
pepperl-fuchs.com/pf-controlstations-exe

Control Stations in GRP (GR.CS*)

Features

- Glass fiber reinforced polyester enclosures
- Installation in Zones 1/21 and 2/22
- Installation in Class I, II, Division 2
- Ex de, Ex ib and Ex tb certified
- Up to 68 operators possible per control station
- 7 enclosure size options
- Customizable configuration of operators, cable entry quantities, and cable gland types as per specification
- Wide range of labels and accessories available
- Modern design with high impact resistance
- Easy installation due to easily accessible mounting points
- Wide ambient temperature range

Function

The GR.CS* series is a purposely designed range of control stations that can be equipped with operators, contact blocks, terminals, and entry devices to meet your exact specification. The data tables below list all selections and options. Pepperl+Fuchs solution engineering teams provide any custom configurations, including combinations of terminals and control elements.

The standardized GR* enclosure series for all Pepperl+Fuchs products consists of carbon-loaded, glass fiber reinforced polyester with stainless steel cover screws. This series provides an anti-static, UV-stabilized, and corrosion-resistant solution. Many features provide for easy installation and operation.

Technical Data		
Electrical specifications	Operating voltage	400 V AC max., 250V with North American Approvals
	Operating current	16A max., 5A max with North American Approvals
Indicators/operating means	Control elements	max. 68 per enclosure
Mechanical specifications	Dimensions	see data table
	Enclosure cover	fully detachable
	Degree of protection	P66 , Type 4X
Material	Enclosure	carbon loaded, antistatic glass fiber reinforced polyester (GRP)
	Finish	inherent color black
	Cover seal	foamed silicone
Ambient conditions	Ambient temperature	–40 ... 55 °C (–40 ... 131 °F), optional –50 ... 55 °C (–67 ... 131 °F)
Data for application in connection with hazardous areas	EU-Type Examination Certificate	CML 16 ATEX 3009X
	Marking	Ex II 2 GD Ex db eb mb IIC T* Gb, Ex ib IIC T* Gb, Ex db eb ib mb op pr IIC T* Gb, Ex eb op pr IIC T* Gb, Ex tb IIIC T** °C Db T6/T80 °C @ Ta +40 °C, T5/T95 °C @ Ta +55 °C, T4/T130 °C @ Ta +55 °C
International approvals	IECEx approval	IECEx CML 16.0008X
	CCC approval	2020322304002545
	Further approvals	available on request

For further technical data, please refer to individual datasheets.

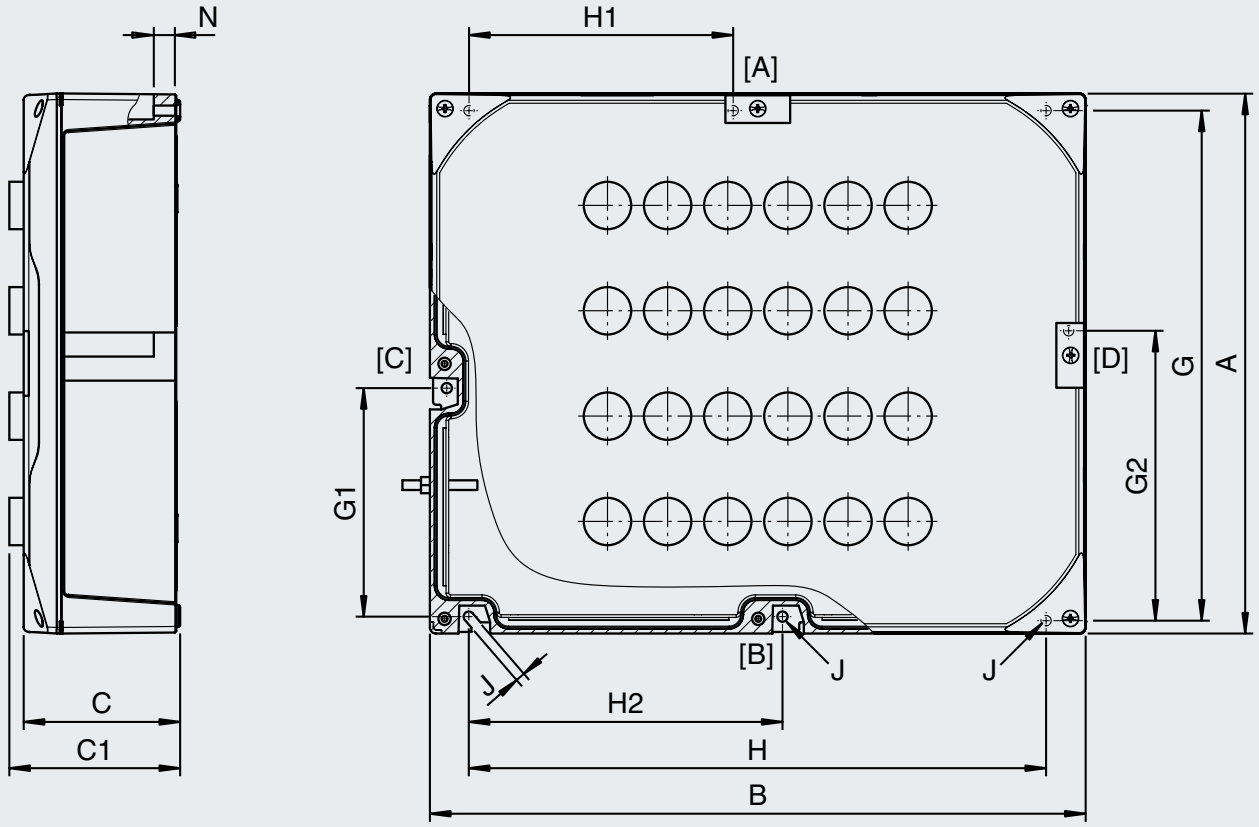

See data table for dimension values. Image and drawing are generic for this enclosure type and may deviate from the specific version.

For more information, visit:

Dimensions and Enclosure Details	External dimensions [mm]										Mounting screws qty.	Mass [kg]	Cover screws		
Type	A	B	C	C1 max.	G	H	H1	H2	J	N			Mx	qty.	Torque [Nm]
GR.CS*.18.18.10	179	179	104	169	126	156	–	–	7	18	2	1.4	M6	4	3.5
GR.CS*.18.24.10	179	239	104	169	156	186	–	–	7	18	2	1.7	M6	4	3.5
GR.CS*.18.36.10	179	359	104	169	156	306	–	–	7	18	4	2.4	M6	4	3.5
GR.CS*.18.36.17	179	359	166.5	231.5	156	336	–	–	7	18	4	3.1	M6	4	3.5
GR.CS*.36.36.10	359	359	104	169	306	336	–	–	7	18	4	3.7	M6	4	3.5
GR.CS*.36.36.17	359	359	166.5	231.5	306	336	–	–	7	18	4	4.6	M6	4	3.5
GR.CS*.36.72.17	359	719	166.5	231.5	336	666	316.5	349.5	7	18	6	8.3	M6	6	3.5

Mass is valid for empty enclosure, it will increase according to integrated components and cable glands. For configurations details, please refer to individual datasheets or contact Pepperl+Fuchs.

Control Stations in Stainless Steel (SR.CS*)

Features

- Stainless Steel enclosure
- Installation in Zone 1, Zone 2, Zone 21 and Zone 22
- Installation in Class I, II, Division 2
- Ex db eb, Ex ib and Ex tb certified
- Various enclosure size options
- Return Flange Sealing provides Drain Channel
- Customizable configuration of operators, cable entry quantities and cable gland types as per specification
- Option for vertical or horizontal mounting provides high flexibility
- Wide range of labels and accessories available

Function

The SR series is a flexible range of control stations that are fully customizable. Enclosures can meet the needs of user specifications by being supplied with or without accessories such as mounting brackets or gland plates. A comprehensive range of operating elements, contact blocks, terminals, entry devices and enclosure accessories are available to ensure each configuration will exactly meet any application requirements.

Enclosures are manufactured from brushed AISI 316L stainless steel and all fixings are manufactured from A4 grade stainless steel as standard to provide excellent tarnish and corrosion resistance. Your solution can be mounted in portrait or landscape orientation in temperatures ranging from –40°C up to +55 °C. Endless configurations can be confirmed by your local Pepperl+Fuchs office.

Technical Data		
Electrical specifications	Operating voltage	400V AC max., 250V AC max. with North American Approvals
	Operating current	16A max., 6A max. with North American Approval
Mechanical specifications	Dimensions	see data table
	Enclosure cover	fully detachable, concealed hinges
	Cover seal	one piece closed cell silicone
	Degree of protection	P66 , Type 4X
Material	Enclosure	1.5 mm 316L, (1.4404) stainless steel
	Finish	electropolished
Ambient conditions	Ambient temperature	–40 ... 55 °C (–40 ... 131 °F)
Data for application in connection with hazardous areas	EU-Type Examination Certificate	CML 16 ATEX 3009X
	Marking	Ex II 2 GD Ex db eb mb IIC T* Gb, Ex ib IIC T* Gb, Ex db eb ib mb IIC T* Gb T6/T80 °C @ Ta +40 °C, T4/T130 °C @ Ta +55 °C
International approvals	ETL approval ETL certificate Approved for cETLus Ambient temperature	 Intertek 5003368 , Intertek 5022079 Class I, Division 2, Groups A, B, C, D according UL 508A , UL 121201 , CSA C22.2, No. 213, 286 -25 ... 40 °C (-13 ... 104 °F) T6 -40 ... 55 °C (-40 ... 131 °F) T5
	IECEx approval	IECEx CML 16.0008X
	UKCA approval	CML 21 UKEX 2550X
	Further approvals	available on request

For further technical data, please refer to individual datasheets.

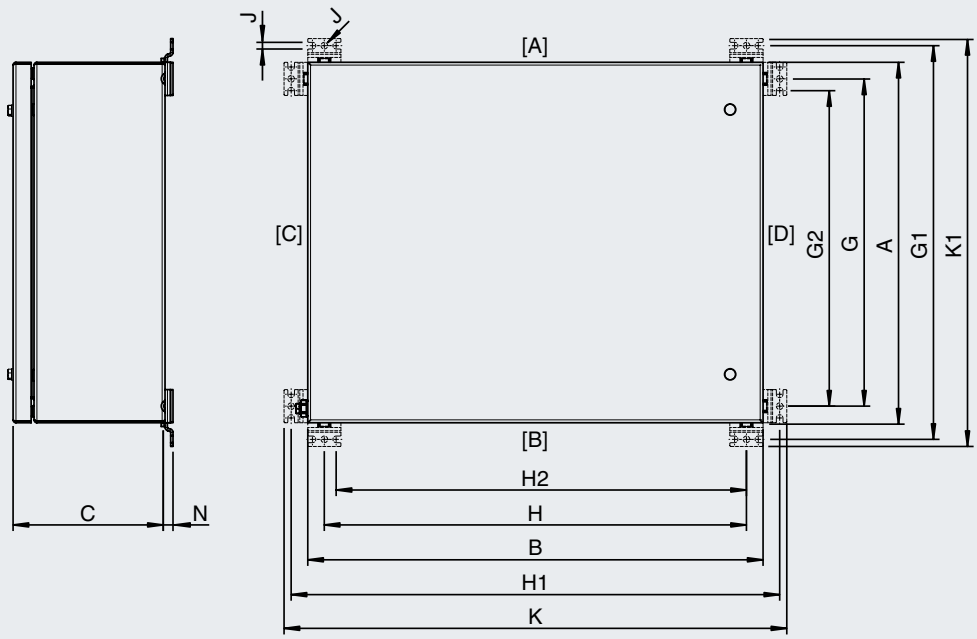

For more information, visit:

Base-Mounted Contact Blocks	External dimensions [mm]					Mounting [mm]								Mass approx. [kg]	Cover screws		
Type	A	B	C	K	K1	G	G1	G2	H	H1	H2	J	N		Mx	qty.	Torque [Nm]
SRM.26.26.09	260	260	87	310	310	225	295	212.5	225	295	212.5	7	8.5	5.3	M6	4	3 - 3.5
SRM.31.31.09	310	310	87	360	360	275	345	262.5	275	345	262.5	7	8.5	7.2	M6	4	3 - 3.5
SRM.38.48.09	380	480	87	430	530	345	415	332.5	445	515	432.5	7	8.5	11	M6	6	3 - 3.5

Lid-Mounted Contact Blocks	External dimensions [mm]					Mounting [mm]								Mass approx. [kg]	Cover screws		
Type	A	B	C	K	K1	G	G1	G2	H	H1	H2	J	N		Mx	qty.	Torque [Nm]
SRM.26.26.16	260	260	160	310	310	295	225	212.5	225	295	282.5	7	8.5	5.8	M6	4	3.5
SRM.31.31.16	310	310	160	360	360	345	275	262.5	275	345	332.5	7	8.5	8	M6	4	3.5
SRM.38.48.16	380	480	160	530	430	515	345	332.5	445	415	402.5	7	8.5	12	M6	6	3.5
SRL.48.48.16	480	480	160	530	530	515	445	432.5	445	515	502.5	7	8.5	14	M6	8	3.5
SRL.48.76.16	480	760	160	810	530	795	445	432.5	725	515	502.5	7	8.5	20	M6	8	3.5

Mass is valid for empty enclosure, it will increase according to integrated components and cable glands.

With North American Approvals	External dimensions [mm]						Mounting [mm]								Mass approx. [kg]	Cover screws		
Type	A	B	C	C2	K	K1	G	G1	G2	H	H1	H2	J	N		Mx	qty.	Torque [Nm]
SRM.26.26.16	260	260	160	174	310	310	225	295	212.5	225	295	212.5	7	8.5	5.8	M6	4	3 - 3.5
SRM.31.31.16	310	310	160	174	360	360	275	345	262.5	275	345	262.5	7	8.5	8	M6	4	3 - 3.5
SRM.38.38.22	380	380	220	234	430	430	345	415	332.5	345	415	332.5	7	8.5	11	M6	4	3 - 3.5
SRM.38.48.22	380	480	220	234	530	530	345	415	332.5	445	515	432.5	7	8.5	13	M6	6	3 - 3.5
SRL.40.60.22	400	600	220	234	650	450	365	435	352.5	565	635	552.5	7	8.5	15.5	M6	6	3 - 3.5
SRL.48.48.22	480	480	220	234	530	530	445	515	432.5	445	515	432.5	7	8.5	16	M6	8	3 - 3.5
SRL.48.76.22	480	760	220	234	810	530	445	515	432.5	725	795	712.5	7	8.5	22	M6	8	3 - 3.5
SRL.60.60.26	600	600	260	274	650	650	565	670	552.5	565	635	552.5	7	8.5	24	M6	8	3 - 3.5
SRX.80.80.30	800	800	300	314	900	900	765	870	752.5	765	870	752.5	7	8.5	34	M6	8	3 - 3.5
SRX.90.60.30	900	600	300	314	700	100	865	970	852.5	565	670	552.5	7	8.5	33	M6	10	3 - 3.5

Control and Interface Cabinets (Ex tb) in Stainless Steel (DS*)

Features

- Stainless steel enclosure
- Various enclosure sizes and styles
- Installation in Zone 21 and Zone 22
- Ex tb certified
- IP65/IP66 rated
- Customizable configuration of operators, cable entry quantities, and cable gland types as per specification
- Wide range of labels and accessories available
- Integration of electrical components and operating elements in Ex tb enclosures as per customer specification
- Product available for Australia and New Zealand only

Function

The DS enclosure series are used as interface cabinets, control stations, and terminal boxes. The enclosures are manufactured from painted or unpainted stainless steel and have either a bolt-on or hinged cover with securing hexagon head screws or quarter turn locks respectively.

The enclosures may be fitted with separately certified operating elements such as push buttons, control switches, indicators, and other equivalent separately certified devices, as well as round or square viewing windows for integrated monitoring equipment. The enclosures may also be fitted with general type electrical equipment such as motor starters, circuit breakers, transformers, isolators, PLCs, and other electrical equipment. For detailed configurations, please contact your local Pepperl+Fuchs office.

Technical Data		
Electrical specifications	Operating voltage	690 V max.
	Operating current	application-specific
	Function	multiple functions as per specification
Mechanical specifications	Dimensions	see data table
	Enclosure cover	fully detachable
	Degree of protection	IP65/66
Material	Enclosure	1.5 mm 316L, (1.4404) stainless steel
	Finish	electropolished or powder coated
	Cover seal	chloroprene
Ambient conditions	Ambient temperature	–20 ... 55 °C (–4 ... 131 °F), depending on integrated components
International approvals	IECEx approval	IECEx SIM 09.0001X
	IECEx marking	Ex tD A21, T80 °C @ Ta +55 °C

For further technical data, please refer to individual datasheets.

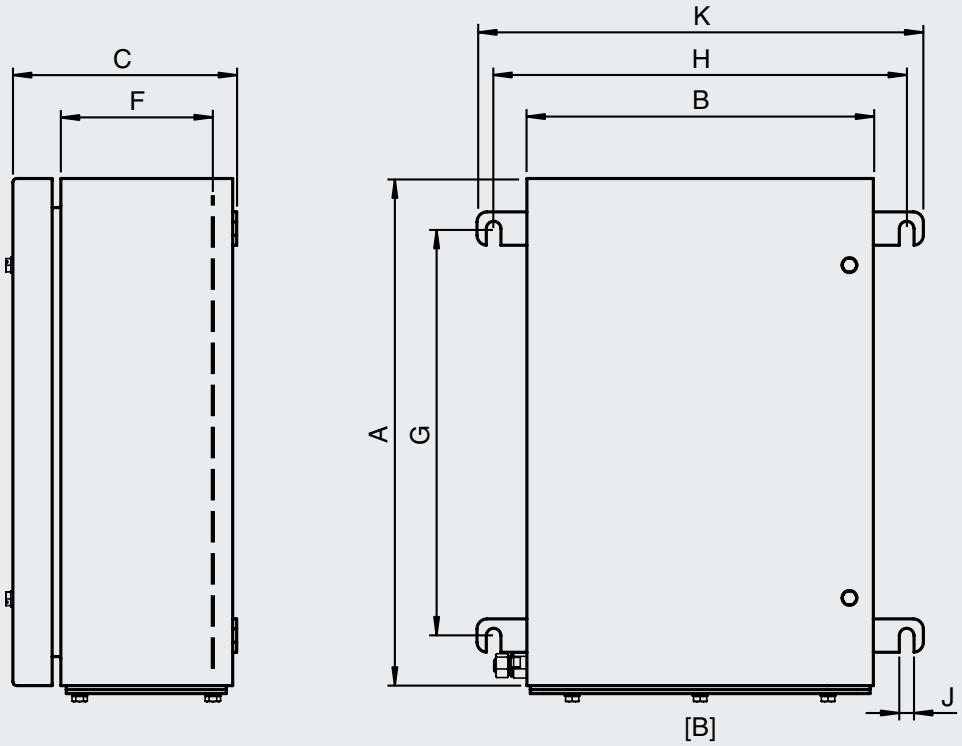

See data table for dimension values. Image and drawing are generic for this enclosure type and may deviate from the specific version.

For more information, visit:

Dimensions and Enclosure Details	External dimensions [mm]				Internal dimen-sions [mm]	Mounting [mm]			Mass approx. [kg]	Cover screws			Max. power dissipation at T6/+40 °C [W]
Type	A	B	C	K	F	G	H	J		Mx	qty.	Torque [Nm]	
DS1110*	106	116	75	146	62		126	8.5	1.2	M6	4	3	10
DS1511*	121	156	85	156	63	136	100	8.5	1.7	M6	4	3	12
DS2315*	156	236	121	196	97	176	180	8.5	2.7	M6	4	3	15
DS3030*	300	300	200	352	135	180	325	8.5	7.2	M6	2	3	24
DS4050*	500	400	200	452	135	380	425	8.5	12	M6	4	3	43
DS5060*	600	500	200	552	135	480	525	8.5	15.8	M6	4	3	67
DS6090*	900	600	200	652	135	780	630	8.5	31.7	M6	8	3	80
DS8013*	1300	800	300	852	235	1180	825	8.5	53.5	(1)	–	–	210

1) Quarter-turn key locks only. Mass is valid for empty enclosure, it will increase according to integrated components and cable glands.
For configurations details, please refer to individual datasheets or contact Pepperl+Fuchs.

Control Stations

Ex d IIB+H_2 and Ex tb control stations allow the safe operation and monitoring of power distribution networks and machinery in hazardous areas and demanding industrial environments. Reliable protection is guaranteed by a wide selection of sturdy flameproof enclosures available in various designs and materials. A multitude of operator elements covering all required control functions can be integrated according to customer specifications. Corresponding degrees of protection and ambient temperature ranges enable use in almost any conditions.

EJB—Ex d IIB+H_2 Aluminum and Stainless Steel

The EJB and EJBX series of Ex d IIB+H_2 certified enclosures lay the foundation for the application-specific configuration of control stations. The enclosures are manufactured from copper-free aluminum and high-quality stainless steel. The high durability and variety of enclosure sizes meet the requirements of many industries, including offshore and marine applications.

For more information, visit
pepperl-fuchs.com/pf-controlstations-exd

Control Stations (Ex d IIB+H_2) in Aluminum and Stainless Steel (EJB*.CS)

Features

- Enclosures made of copper-free aluminum or AISI 316L stainless steel
- Suitable for operation in Zones 1/21 and 2/22
- Certified Ex d IIB+H_2 and Ex tb
- Suitable for operation in Class I, II Division 1
- Degree of protection IP66 or IP66/IP67, NEMA Type 4X
- Many enclosure size options
- Wide choice of operators
- Customizable configuration of operating elements and cable gland types as per specification
- Choice of viewing windows for monitoring instruments

Function

The EJB and EJBX series of Ex d IIB+H_2 certified enclosures form the optimal basis for the application-specific configuration of control stations. A wide range of components and control functions can be integrated into one of many Ex d and Ex tb certified flameproof enclosures. They come in many sizes and designs and are manufactured from high-quality stainless steel or copper-free aluminum with increased corrosion resistance. The durable, versatile enclosures meet the requirements of many industries, including offshore and marine applications. A choice of windows allows viewing of integrated monitoring functions. For enclosure details, please refer to datasheet EJB* Control and Distribution Panels (Ex d).

Technical Data		
Electrical specifications	Operating voltage	660 V DC/1000 V AC max.
	Operating current	1600 A max.
Mechanical specifications	Dimensions	see data table in datasheet EJB* Control and Distribution Panels (Ex d)
	Enclosure cover	detachable, optional hinges
	Cover seal	none, O-ring for IP66/67
	Degree of protection	IP66 (IP66/67 with O-ring)
Material	Enclosure	Aluminum alloy or AISI 316L stainless steel
	Finish	epoxy coated RAL 7005 (grey) or shot peened
Ambient conditions	Ambient temperature	–50 ... 60 °C (–58 ... 140 °F), depending on integrated components
Data for application in connection with hazardous areas	EU-Type Examination Certificate	INERIS 14 ATEX 0022X, INERIS 14 ATEX 9010U
	Marking	Ex II 2 GD, Ex d IIB+H_2 T* Gb, Ex tb IIIC T** °C Db T6/T85 °C, T5/T100 °C, T4/T135 °C,T3/T200 °C depending on configuration, ambient temperature and built-in power loss
	Maximum power dissipation	see data table in datasheet EJB* Control and Distribution Panels (Ex d)
International approvals	IECEx approval	IECEx INE 14.0029X, IECEx INE 14.0028U
	UL approval	Approved for: Class I, Division 1, Groups B, C, D Class II, Division 1, Groups E, F, G Type 4, 4X, 7, 9 cULus: Empty enclosure E482035 , UL 50E , UL 1203 , CSA C22.2, No. 25, 30 cETLus: Control panels E5003368 Ambient temperature: -25 ... 60 °C (-13 ... 140 °F)
	CCC approval	2020322303002546
	UKCA approval	CML 21UKEX1424X, CML 21UKEX1425U
	Further approvals	available on request

For further technical data, please refer to individual datasheets.

For more information, visit
pepperl-fuchs.com/pf-controlstations-exd

Control and Distribution Panels

A wide range of solutions for distribution and control in hazardous areas can be designed based on sturdy flameproof enclosures and appropriately certified operating elements. Control and distribution panels can contain any kind of electrical installation or modules for automation of production processes. In order to design the optimal solution for the specific application, the experienced project engineers at Pepperl+Fuchs' Solution Engineering Centers (SECs) will support the customer from the first evaluation of the project through to final inspection and certification. Each solution will be shipped to the location of operation with full documentation and ready for commissioning.

EJB—Aluminum and Stainless Steel

The EJB series flameproof enclosures allow standard industry components to be used in hazardous areas. Electrical installations can be flexibly integrated into more than 40 different sizes of copper-free aluminum or AISI 316L stainless steel enclosures. Rectangular or circular windows allow integrated monitoring instruments to be viewed. Each control or distribution solution is delivered fully tested, certified, documented, and ready for commissioning.

GUB—Aluminum and Stainless Steel

Control and distribution solutions for harsh environments with gas group IIC are based on the comprehensive series of GUB enclosures. A wide ambient temperature range and installation protection up to IP67 allow safe operation in any ambient conditions. More than 50 sizes and designs with viewing windows for integrated device monitoring facilitate efficient, application-specific solutions. They are ready for commissioning upon delivery and come with all certifications and documentation.

FH—Aluminum

The FH series comprises a range of configurable control and distribution panels based on robust Ex d IIB+H2 certified enclosures. Different electrical components and operating elements can be integrated along with optional thermo-resistant tempered glass windows.

For more information, visit
pepperl-fuchs.com/pf-controlpanels-exd

Control Panels (Ex d IIB+H_2) in Aluminum (EJB*)

Features

- Enclosures made of copper-free aluminum
- Suitable for operation in Zones 1/21 and 2/22
- Certified Ex d IIB+H_2 and Ex tb
  Suitable for operation in Class I, II Division 1
- Degree of protection IP66 or IP66/IP67, NEMA Type 4X
- More than 20 enclosure size options
- Free configuration of cable entries and terminals for customized terminal boxes
- Wide choice of operators for control stations
- Customizable configuration of operating elements and cable gland types as per specification
- Integration of electrical components and operating elements as per customer specification
- Choice of viewing windows for monitoring instruments

Function

The EJB series of Ex d IIB+H_2 certified enclosures forms the optimal basis for the application-specific configuration of terminal boxes, control stations, and control and distribution panels. A wide range of components and control functions can be integrated into one of many Ex d and Ex tb certified flameproof enclosures. They come in many sizes and designs and are manufactured from copper-free aluminum with increased corrosion resistance. The durable, versatile enclosures meet the requirements of many industries, including offshore and marine applications. A choice of windows allows viewing of integrated monitoring functions. Electrical components can be integrated as per customer specification.

Technical Data		
Electrical specifications	Operating voltage	660 V DC/1000 V AC max.
	Operating current	1600 A max.
Mechanical specifications	Dimensions	see data table values might differ slightly due to casting and manufacturing tolerances dimensions are valid for standard enclosures and IP66 versions only
	Enclosure cover	detachable, optional hinges
	Cover seal	none, O-ring for IP66/67
	Degree of protection	IP66 (IP66/67 with O-ring)
Material	Enclosure	Aluminum alloy
	Finish	epoxy coated RAL 7005 (grey)
Ambient conditions	Ambient temperature	–50 ... 60 °C (–58 ... 140 °F), depending on integrated components
Data for application in connection with hazardous areas	EU-Type Examination Certificate	INERIS 14 ATEX 0022X, INERIS 14 ATEX 9010U
	Marking	Ex II 2 GD, Ex d IIB+H_2 T* Gb, Ex tb IIIC T** °C Db T6/T85 °C, T5/T100 °C, T4/T135 °C,T3/T200 °C depending on configuration, ambient temperature and built-in power loss
	Maximum power dissipation	see data table, maximum power dissipation at T4/+40 °C, enclosure without window
International approvals	IECEx approval	IECEx INE 14.0029X, IECEx INE 14.0028U
	UL approval	Approved for: Class I, Division 1, Groups B, C, D Class II, Division 1, Groups E, F, G Type 4, 4X, 7, 9 cULus: Empty enclosure E482035 , UL 50E , UL 1203 , CSA C22.2, No. 25, 30 cETLus: Control panels E5003368 Ambient temperature: -25 ... 60 °C (-13 ... 140 °F)
	CCC approval	2020322303002546
	Further approvals	available on request

For further technical data, please refer to individual datasheets.

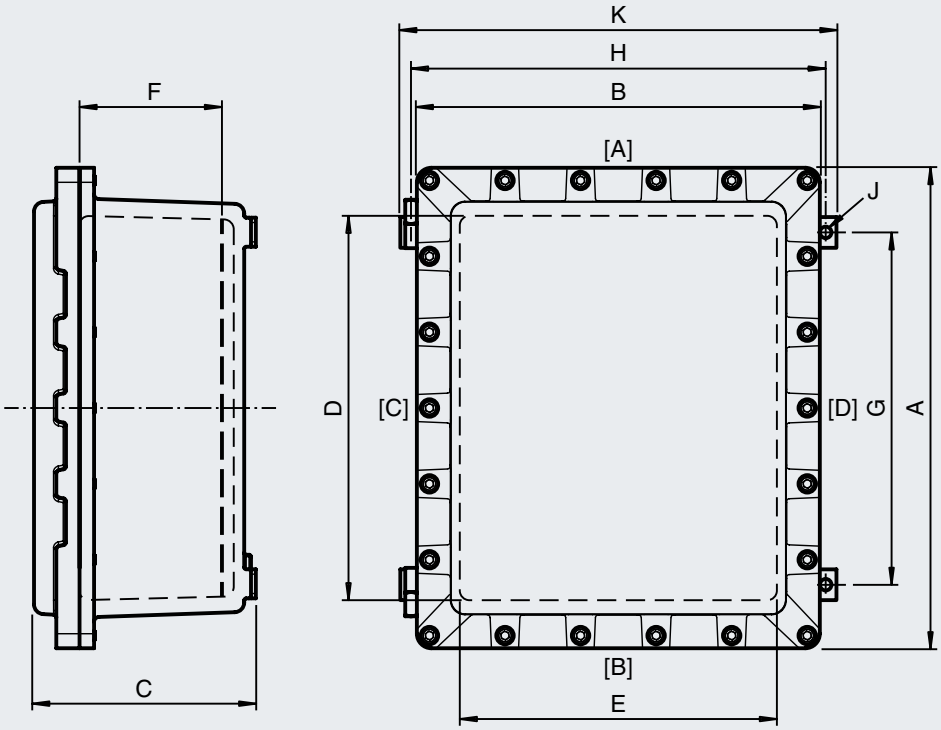

See data table for dimension values. Real values might differ slightly due to casting and manufacturing tolerances. Dimensions are valid for standard enclosures and IP66 versions only. Image and drawing are generic for this enclosure type and may deviate from the specific version.

Dimensions and Enclosure Details	External dimensions [mm]				Internal dimensions [mm]			Mounting [mm]			Mass approx. [kg]	Cover screws			Max. power dissipation at T4/+40 °C [W]
Type	A	B	C	K	D	E	F	G	H	J		Mx	qty.	Torque [Nm]	
EJB0*	200	136	150	128	140	75	115	133	108	8	3.8	M6	6	15	51
EJB2A*	220	220	159	226	162	162	130	157	206	8	6.4	M6	8	15	104
EJB4A*	265	225	180	226	200	160	136	188	206	8	8.5	M8	10	20	125
EJB6A*	332	232	172	216	250	150	133	230	196	8	9.8	M8	10	20	139
EJB8*	390	290	182	270	300	200	131	282	250	10	15.7	M8	14	20	192
EJB8A*	390	290	204	270	300	200	153	282	250	10	16.6	M8	14	20	211
EJB8B*	390	290	237	270	300	200	186	282	250	10	17.9	M8	14	20	236
EJB9A*	412	242	186	226	330	160	139	312	206	8	14.2	M8	14	20	185
EJB9B*	412	242	258	226	330	160	211	312	206	8	16.8	M8	14	20	238
EJB10A*	468	358	215	350	370	260	165	345	320	9	25.1	M8	16	20	305
EJB10B*	468	358	265	350	370	260	215	345	320	9	28.7	M8	16	20	353
EJB11A*	498	418	225	415	400	320	173	363	385	10	32	M10	22	30	383
EJB11B*	498	418	276	415	400	320	218	363	385	10	37	M10	22	30	432
EJB15*	580	430	226	460	500	350	172	460	430	11	40.8	M10	20	30	481
EJB15A*	580	430	282	460	500	350	221	460	430	11	52	M10	20	30	540
EJB17*	676	503	269	494	570	397	198	538	464	11	56	M10	22	30	745
EJB17A*	676	503	389	494	570	397	317	538	464	11	67	M10	22	30	746
EJB17Q*	630	630	368	613	500	500	278	453	583	11	94	M12	24	40	593
EJB18A*	750	537	303	535	640	427	213	509	505	11	85	M12	24	40	707
EJB18B*	750	537	408	535	640	427	318	509	505	11	100	M12	24	40	864
EJB20*	935	685	353	670	805	555	247	668	630	14	167	M16	32	65	1616
EJB20A*	935	685	500	670	805	555	393	668	630	14	195	M16	32	65	1616

Mass is valid for empty enclosure, it will increase according to integrated components and cable glands.
Dimensions are valid for standard enclosures and IP66 versions only.

Control Panels (Ex d IIB+H_2) in Stainless Steel (EJBX*)

Features

- Enclosures made of AISI 316L stainless steel
- Suitable for operation in Zones 1/21 and 2/22
- Certified Ex d IIB+H_2 and Ex tb
- Suitable for operation in Class I, II Division 1
- Degree of protection IP66 or IP66/IP67, NEMA Type 4X
- Many enclosure size options
- Free configuration of cable entries and terminals for customized terminal boxes
- Wide choice of operators for control stations
- Customizable configuration of operating elements and cable gland types as per specification
- Integration of electrical components and control elements as per customer specification
- Choice of viewing windows for monitoring instruments

Function

The EJBX series of Ex d IIB+H_2 certified enclosures forms the optimal basis for the application-specific configuration of terminal boxes, control stations, and control and distribution panels. A wide range of components and control functions can be integrated into Ex d and Ex tb certified flameproof enclosures. They come in many sizes and designs and are manufactured from high-quality stainless steel. The durable, versatile enclosures meet the requirements of many industries, including offshore and marine applications. A choice of windows allows integrated monitoring functions to be viewed. Electrical components can be integrated as per customer specification.

Technical Data		
Electrical specifications	Operating voltage	660 V DC/1000 V AC max.
	Operating current	1600 A max.
Mechanical specifications	Dimensions	see data table values might differ slightly due to manufacturing tolerances dimensions are valid for standard enclosures and IP66 versions only
	Enclosure cover	detachable, optional hinges
	Cover seal	none, O-ring for IP66/67
	Degree of protection	IP66 (IP66/67 with O-ring)
Material	Enclosure	AISI 316L stainless steel
	Finish	shot peened
Ambient conditions	Ambient temperature	–50 ... 60 °C (–58 ... 140 °F), depending on integrated components
Data for application in connection with hazardous areas	EU-Type Examination Certificate	INERIS 14 ATEX 0022X, INERIS 14 ATEX 9010U
	Marking	Ex II 2 GD, Ex d IIB+H_2 T* Gb, Ex tb IIIC T** °C Db T6/T85 °C, T5/T100 °C, T4/T135 °C,T3/T200 °C depending on configuration, ambient temperature, and built-in power loss
	Maximum power dissipation	see data table, maximum power dissipation at T4/+40 °C, enclosure without window
International approvals	IECEx approval	IECEx INE 14.0029X, IECEx INE 14.0028U
	UL approval	Approved for: Class I, Division 1, Groups B, C, D Class II, Division 1, Groups E, F, G Type 4, 4X, 7, 9 cULus: Empty enclosure E482035 , UL 50E , UL 1203 , CSA C22.2, No. 25, 30 cETLus: Control panels E5003368 Ambient temperature: -25 ... 60 °C (-13 ... 140 °F)
	CCC Ex Certificate	2020322303002546
	Further approvals	available on request

For further technical data, please refer to individual datasheets.

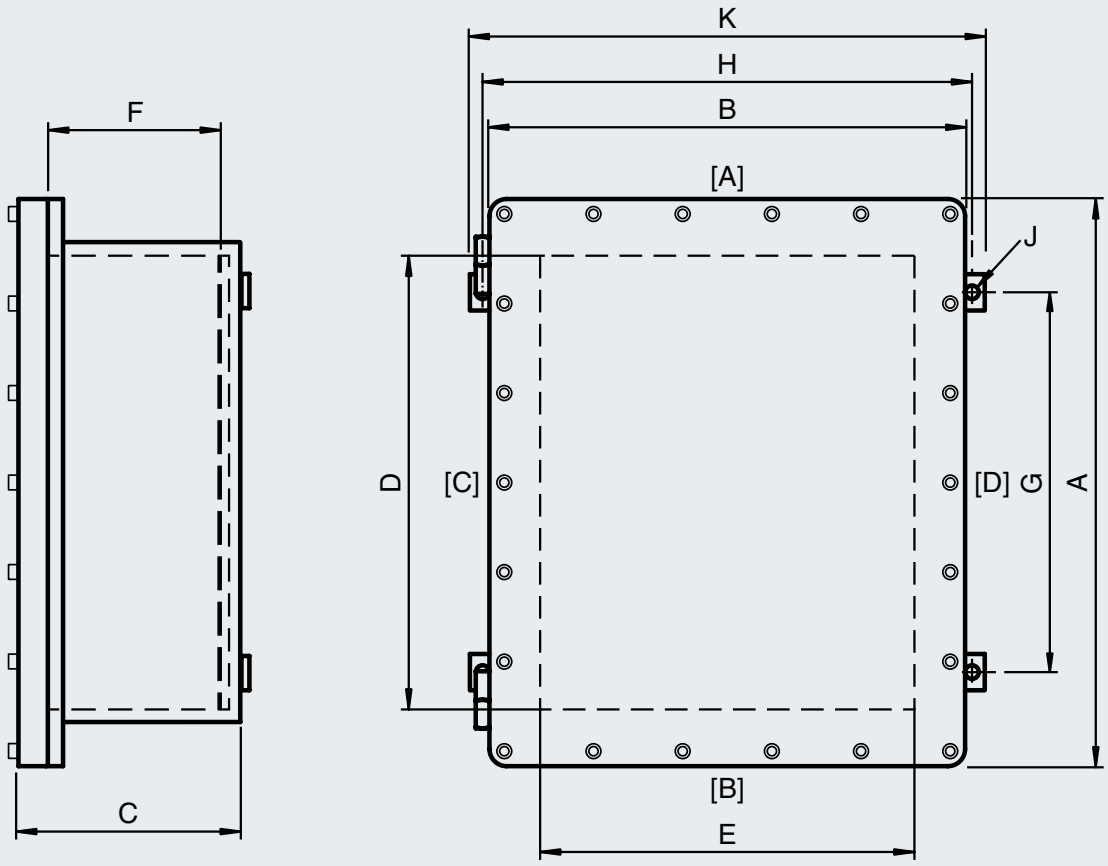

See data table for dimension values. Real values might differ slightly due to manufacturing tolerances. Dimensions are valid for standard enclosures and IP66 versions only. Image and drawing are generic for this enclosure type and may deviate from the specific version.

Dimensions and Enclosure Details—Approvals for ATEX/IECEx Europe	External dimensions [mm]				Internal dimensions [mm]			Mounting [mm]			Mass [kg]	Cover screws		Max. power dissipation at T4/+40 °C [W]
Type	A	B	C	K	D	E	F	G	H	J		Mx	qty.	
EJBX0*.U*	198	133	141	128	140	75	110	133	108	8	7	M6	6	51
EJBX2A*.U*	220	220	155	226	160	160	125	157	206	8	12	M6	8	104
EJBX3A*.U*	252	152	165	165	200	100	135	185	145	8	13	M6	10	83
EJBX4A*.U*	262	222	180	226	200	160	145	188	206	8	17	M8	10	125
EJBX6A*.U*	309	209	170	216	250	150	135	233	196	8	19	M8	10	139
EJBX8B*.U*	371	271	232	270	300	200	195	282	250	10	36	M8	14	236
EJBX10B*.U*	450	340	262	350	370	260	225	345	320	10	66	M8	16	353
EJBX11B*.U*	490	410	268	415	400	320	230	363	385	10	80	M10	22	432
EJBX15A*.U*	580	430	265	460	500	350	220	462	430	12	96	M10	20	540
EJBX17A*.U*	662	492	363	494	570	400	315	550	464	14	145	M10	22	746
EJBX17Q*.U*	594	594	318	613	500	500	270	453	583	14	143	M12	24	593
EJBX18B*.U*	734	524	368	535	640	430	320	590	505	14	167	M12	24	864
EJBX20A*.U*	922	672	437	670	800	550	380	697	630	16	320	M12	32	1616

Dimensions and Enclosure Details—Approvals for North America	External dimensions [mm]				Internal dimensions [mm]			Mounting [mm]			Mass [kg]	Cover screws		Max. power dissipation at T4/+40 °C [W]
Type	A	B	C	K	D	E	F	G	H	J		Mx	qty.	
EJBX0*.U*.UL*	198	133	156.5	140	140	75	110	133	120	9	12	M6	6	51
EJBX2A*.U*.UL*	220	220	171.5	226	160	160	125	157	206	9	21	M6	8	104
EJBX3A*.U*.UL*	252	152	171.5	165	200	100	135	185	145	8	18	M6	10	83
EJBX4A*.U*.UL*	262	222	191.5	226	200	160	145	188	206	9	25	M8	10	125
EJBX6A*.U*.UL*	309	209	181.5	216	250	150	135	233	196	9	28	M8	10	139
EJBX8B*.U*.UL*	371	271	241.5	270	300	200	195	282	250	11	46	M8	14	236
EJBX10B*.U*.UL*	450	340	271.5	350	370	260	225	345	320	11	67	M8	16	353
EJBX11B*.U*.UL*	490	410	276.5	415	400	320	230	363	385	11	84	M10	22	432
EJBX15A*.U*.UL*	580	430	266.5	460	500	350	220	462	430	13	101	M10	20	540
EJBX17Q*.U*.UL*	594	594	322.5	613	492	492	270	453	583	15	177	M12	24	593
EJBX18B*.U*.UL*	734	524	372.5	535	632	422	320	590	505	15	207	M12	24	864

Dimensions and Enclosure Details—Approvals for ATEX/IECEx Asia Pacific	External dimensions [mm]				Internal dimensions [mm]			Mounting [mm]			Mass [kg]	Cover screws		Max. power dissipation at T4/+40 °C [W]
Type	A	B	C	K	D	E	F	G	H	J		Mx	qty.	
EJBX0*.U*.AI*	198	133	156.5	140	140	75	110	133	120	9	12	M6	6	51
EJBX2A*.U*.AI*	220	220	171.5	226	160	160	125	157	206	9	21	M6	8	104
EJBX3A*.U*.AI*	252	152	171.5	165	200	100	135	185	145	8	18	M6	10	83
EJBX4A*.U*.AI*	262	222	191.5	226	200	160	145	188	206	9	25	M8	10	125
EJBX6A*.U*.AI*	309	209	181.5	216	250	150	135	233	196	9	28	M8	10	139
EJBX8B*.U*.AI*	371	271	241.5	270	300	200	195	282	250	11	46	M8	14	236
EJBX10B*.U*.AI*	450	340	271.5	350	370	260	225	345	320	11	67	M8	16	353
EJBX11B*.U*.AI*	490	410	276.5	415	400	320	230	363	385	11	84	M10	22	432
EJBX15A*.U*.AI*	580	430	266.5	460	500	350	220	462	430	13	101	M10	20	540
EJBX17A*.U*.AI*	662	492	365.5	494	570	400	315	550	464	15	149	M10	22	746
EJBX17Q*.U*.AI*	594	594	322.5	613	492	492	270	453	583	15	177	M12	24	593
EJBX18B*.U*.AI*	734	524	372.5	535	632	422	320	590	505	15	207	M12	24	864
EJBX20A*.U*.AI*	922	672	434.5	670	800	550	380	697	630	17	338	M12	32	1616

Control Panels (Ex d IIB+H_2) in Aluminum (FH*)

Features

- Enclosures made of copper-free aluminum
- Suitable for operation in Zones 1 and 2
- Certified Ex d IIB+H_2
- 5 enclosure size options
- Free configuration of cable entries and terminals for customized terminal boxes
- Wide range of operators for control stations
- Customizable configuration of operating elements and cable gland types as per specification
- Integration of electrical components and operating elements as per customer specification
- Choice of viewing windows for monitoring instruments

Function

FH* series enclosures are specifically designed for power distribution applications. They can accommodate a busbar chassis of up to 48 poles in a single enclosure. The series consists of 5 enclosure versions manufactured from marine-grade aluminum. Several enclosures can be assembled to form a complete, fully engineered control and distribution panel.

After thorough testing and documentation, each solution will reach its operation site fully certified and ready for commissioning. A choice of windows allow integrated monitoring functions to be viewed. Electrical components can be integrated as per customer specification.

Technical Data		
Electrical specifications	Operating voltage	application-specific
	Operating current	application-specific
Mechanical specifications	Dimensions	see data table, values might differ slightly due to casting and manufacturing tolerances
	Enclosure cover	detachable, optional hinges
	Cover seal	chloroprene
	Degree of protection	IP66
Material	Enclosure	Aluminum alloy
	Finish	epoxy coated RAL 7032
Ambient conditions	Ambient temperature	–20 ... 60 °C (–4 ... 140 °F), depending on integrated components
Data for application in connection with hazardous areas	EU-Type Examination Certificate	see data table
	Marking	Ⓔx II 2 G, Ex d IIB+H_2 T* Gb T6 @ Ta +40 °C/+55 °C/+60 °C
	Maximum power dissipation	see data table, maximum power dissipation at T4/+40 °C, enclosure without window
International approvals	IECEx approval	see data table

For further technical data, please refer to individual datasheets.

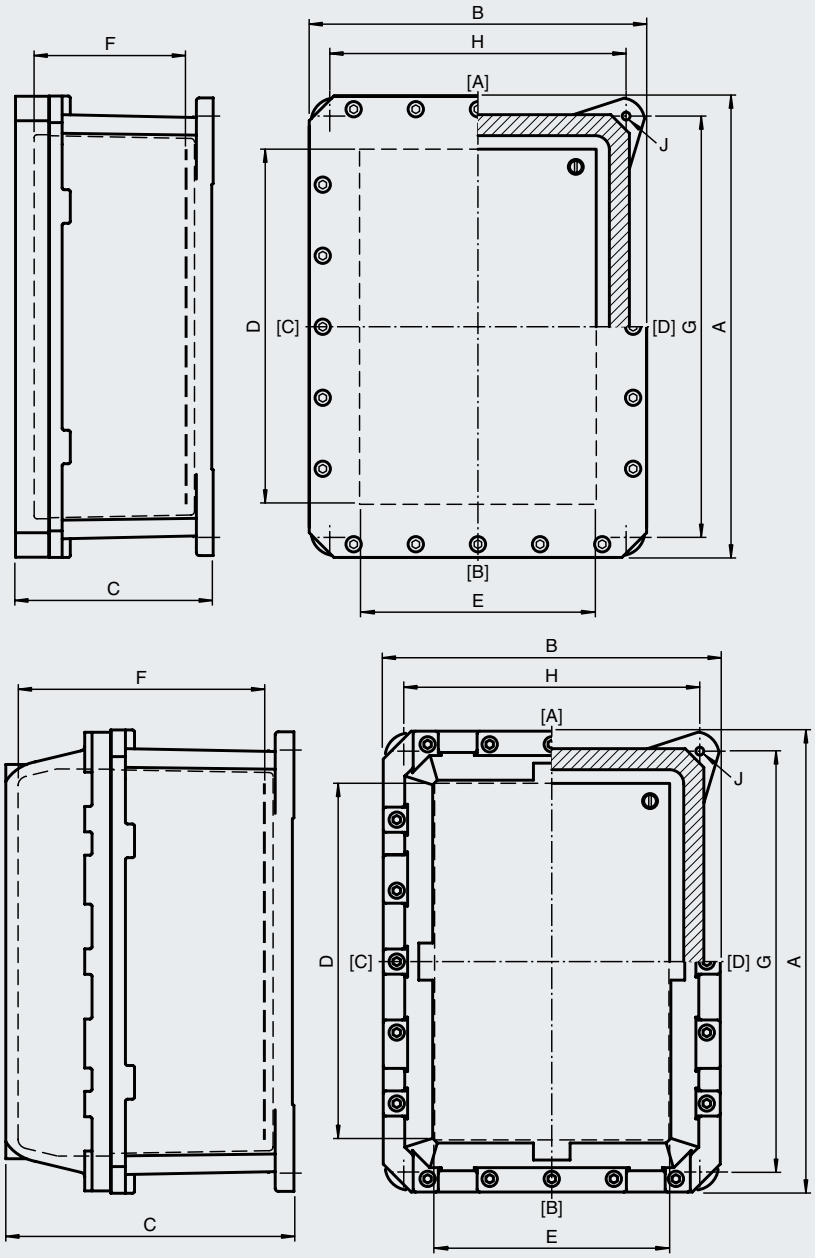

upper drawing: FH150
lower drawing: FH160/FH560/FH24/2

See data table for dimension values. Real values might differ slightly due to casting and/or machining tolerances. Images and drawings are generic for these enclosure types and may deviate from the specific version.

Dimensions and Enclosure Details	External dimensions [mm]				Internal dimensions [mm]			Mounting [mm]			Mass [kg]	EU-Type Examination Certificate	IECEx approval	Max. power dissipation at T4/+40 °C [W]
Type	A	B	C	K	D	E	F							
FH150	490	358	208	–	381	254	164	452	318	8.5	34	SIRA 07 ATEX 1135X	IECEx SIR 12.0108 IECEx TSA 06.0054	160
FH160	490	358	277	–	381	254	230	452	318	8.5	38	SIRA 07 ATEX 1136X	IECEx TSA 07.0040	160
FH560	600	500	224	–	510	410	170	574	474	10.5	54	SIRA 07 ATEX 1137X	IECEx SIR 12.0091	205
FH24/2	775	470	280	–	698	394	190	750	445	13	85	SIRA 10 ATEX 1341X	IECEx SIR 12.0090X	260

Mass is valid for empty enclosure, it will increase according to integrated components and cable glands.

Control Panels (Ex d IIC) in Aluminum (GUB*)

Features

- Enclosures made of copper-free aluminum
- Suitable for operation in Zones 1/21 and 2/22
- Certified Ex d IIC and Ex tb
- More than 50 enclosure size options
- Free configuration of cable entries and terminals for customized terminal boxes
- Customizable configuration of operating elements and cable gland types as per specification
- Integration of electrical components and operating elements as per customer specification
- Choice of viewing windows for monitoring instruments

Function

The GUB series of Ex d IIC certified enclosures forms the optimal basis for the application-specific configuration of terminal boxes and control and distribution panels. A wide range of components and control functions can be integrated into Ex d and Ex tb certified flameproof enclosures. They come in many sizes and designs and are manufactured from copper-free aluminum with increased corrosion resistance. The durable, versatile enclosures meet the requirements of many industries, including offshore and marine applications. A choice of windows allows viewing of integrated monitoring functions. Electrical components can be integrated as per customer specification.

Technical Data		
Electrical specifications	Operating voltage	1000 V DC/1500 V AC max.
	Operating current	recommended: 1600 A max.
Mechanical specifications	Dimensions	see data table values might differ slightly due to casting and manufacturing tolerances
	Enclosure cover	threaded round cover
	Cover seal	none, O-ring for IP66/67
	Degree of protection	IP66 (IP66/67 with O-ring)
Material	Enclosure	Aluminum alloy
	Finish	epoxy coated RAL 7005 (grey)
Ambient conditions	Ambient temperature	–60 ... 60 °C (–76 ... 140 °F), depending on integrated components
Data for application in connection with hazardous areas	EU-Type Examination Certificate	INERIS 14 ATEX 0035X, INERIS 16 ATEX 9005U
	Marking	Ex II 2 GD, Ex d IIC T* Gb, Ex tb IIIC T** °C Db T6/T85 °C, T5/T100 °C, T4/T135 °C,T3/T200 °C depending on configuration, ambient temperature and built-in power loss
	Maximum power dissipation	see data table, maximum power dissipation at T4/+40 °C
International approvals	IECEx approval	IECEx INE 14.0042X, IECEx INE 16.0051U
	UKCA approval	CML 21 UKEX 21304X CML 21 UKEX 2976U
	Further approvals	available on request

For further technical data, please refer to individual datasheets.

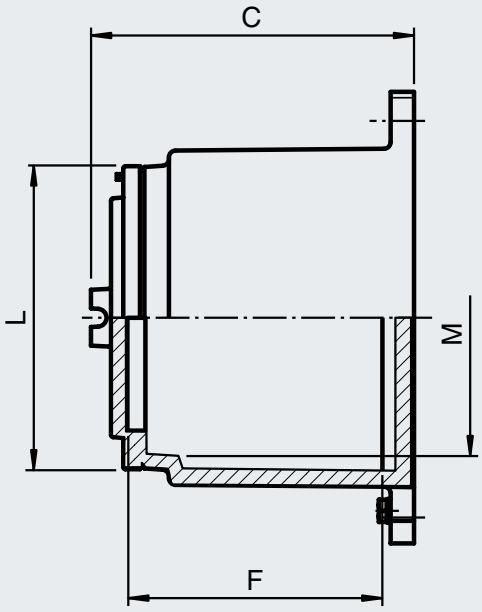

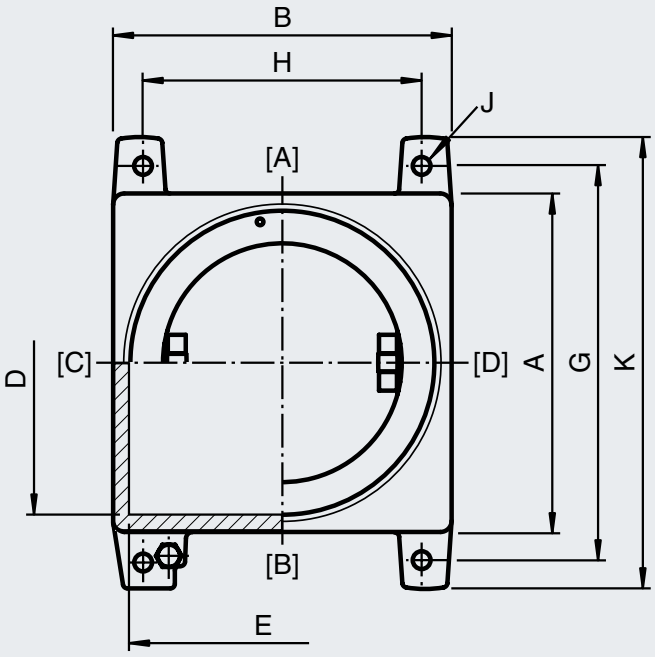

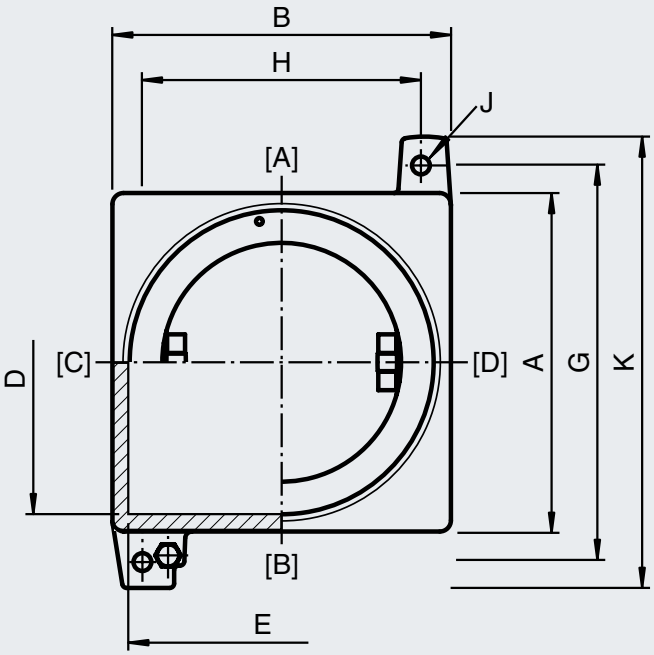

See data table for dimension values. Real values might differ slightly due to casting and manufacturing tolerances. Image and drawing are generic for this enclosure type and may deviate from the specific version.

Dimensions and Enclosure Details	External dimensions [mm]				Internal dimensions [mm]			Mounting [mm]			Diameter [mm]		Mounting brackets quantity	Mass [kg]	Max. power dissipation at T4/+40 °C [W]
Type	A	B	C	K	D	E	F	G	H	J	L	M			
GUB00*	119	119	137	170	92	92	98	145	95	8	112	97	2	2	48
GUB0*	150	150	145	205	125	125	117	178	125	8	136	114	2	3.5	78
GUB0H*	150	150	185	205	125	125	150	178	125	8	136	114	2	4.5	91
GUB1*	200	200	160	255	170	170	110	228	178	10	189	163	2	6.4	122
GUB1H*	200	200	200	255	170	170	150	228	178	10	189	163	2	7.6	143
GUB1PF*	176	176	139	220	150	150	105	196	154	10	170	147	2	6.4	95
GUB2*	250	250	160	305	225	225	112	275	232	10	231	206	4	8.5	181
GUB3*	255	255	215	310	228	228	165	285	228	10	231	206	4	11.5	222
GUB3L*	360	360	245	430	325	325	183	395	318	10	348	320	4	21	293
GUB4* (-20 °C)	450	450	305	530	410	410	227	485	410	10	437	406	4	43.5	466
GUB4*	450	450	305	530	410	410	215	485	410	10	437	406	4	53.5	466
GUB4A* (-20 °C)	450	450	235	530	410	410	157	485	410	10	437	406	4	38	400
GUB4A*	450	450	235	530	410	410	145	485	410	10	437	406	4	48	400
GUB5*	555	555	400	647	514	514	266	595	500	14	546	504	4	80	749

Mass is valid for empty enclosure, it will increase according to integrated components and cable glands.
Values might differ slightly due to casting and manufacturing tolerances.

Control Panels (Ex d IIC) in Stainless Steel (GUBX*)

Features

- Enclosures made of AISI 316L stainless steel
- Suitable for operation in Zones 1/21 and 2/22
- Ex d IIC and Ex tb certified
- Various enclosure size and design variants
- Free configuration of cable entries and terminals for customized terminal boxes
- Customizable configuration of operating elements and cable gland types as per specification
- Integration of electrical components and control elements as per customer specification
- Choice of viewing windows for monitoring instruments

Function

The GUBX series of Ex d IIC certified enclosures forms the optimal basis for the application-specific configuration of terminal boxes and control and distribution panels. A wide range of components and control functions can be integrated into Ex d and Ex tb certified flameproof enclosures. TThey come in many sizes and designs and are manufactured from high-quality stainless steel. The durable, versatile enclosures meet the requirements of many industries, including offshore and marine applications. A choice of windows allows viewing of integrated monitoring functions. Electrical components can be integrated as per customer specification.

Technical Data		
Electrical specifications	Operating voltage	1000 V DC/1500 V AC max.
	Operating current	recommended: 1600 A max.
Mechanical specifications	Dimensions	see data table values might differ slightly due to casting and manufacturing tolerances for custom designed solutions dimensions and mass may differ
	Enclosure cover	threaded round cover
	Cover seal	none, O-ring for IP66/67
	Degree of protection	IP66 (IP66/67 with O-ring)
Material	Enclosure	AISI 316L stainless steel
	Finish	shot peened
Ambient conditions	Ambient temperature	–60 ... 60 °C (–76 ... 140 °F), depending on integrated components
Data for application in connection with hazardous areas	EU-Type Examination Certificate	INERIS 14 ATEX 0035X, INERIS 16 ATEX 9005U
	Marking	Ex II 2 GD, Ex d IIC T* Gb, Ex tb IIIC T** °C Db T6/T85 °C, T5/T100 °C, T4/T135 °C,T3/T200 °C depending on configuration, ambient temperature and built-in power loss
	Maximum power dissipation	see data table, maximum power dissipation at T4/+40 °C
International approvals	IECEx approval	IECEx INE 14.0042X, IECEx INE 16.0051U
	EAC approval	TC RU C-IT.AA87.B.00156
	Further approvals	available on request

For further technical data, please refer to individual datasheets.

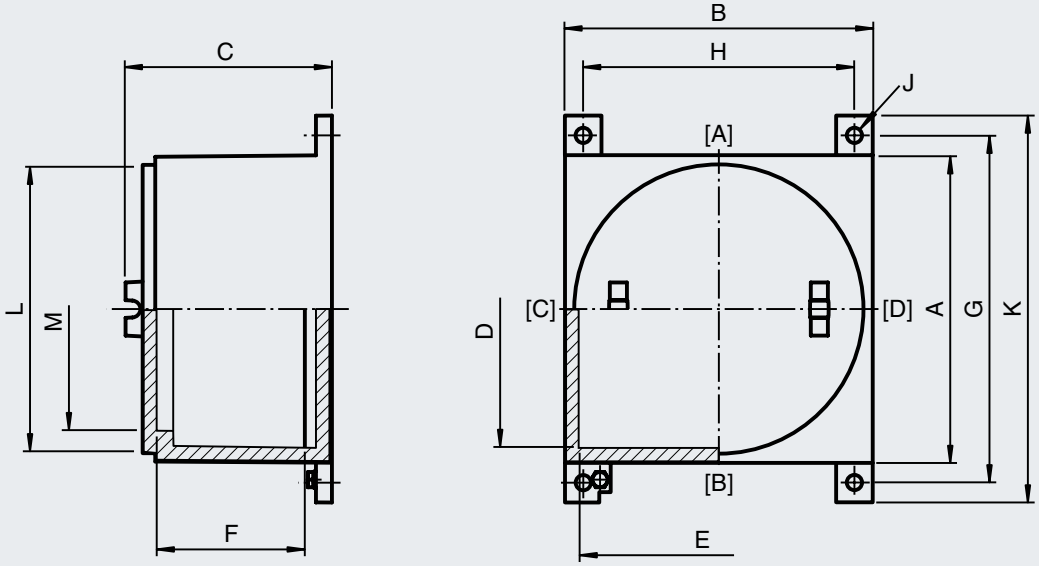

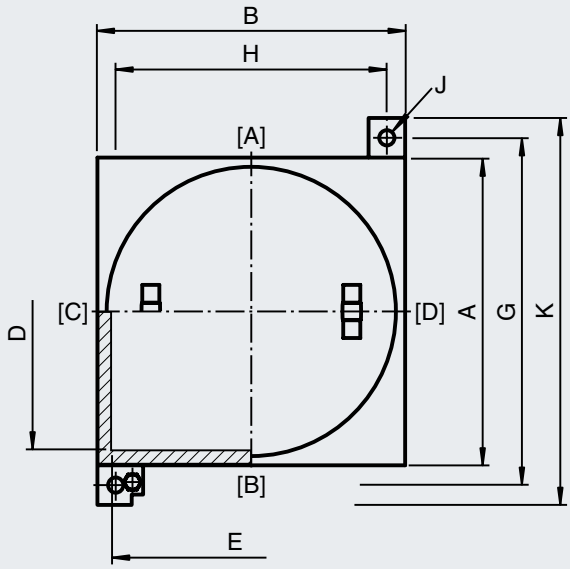

See data table for dimension values. Real values might differ slightly due to casting and manufacturing tolerances. Image and drawing are generic for this enclosure type and may deviate from the specific version.

Dimensions and Enclosure Details	External dimensions [mm]				Internal dimensions [mm]			Mounting [mm]			Diameter [mm]		Mounting brackets quantity	Mass [kg]	Max. power dissipation at T4/+40 °C [W]
Type	A	B	C	K	D	E	F	G	H	J	L	M			
GUBX00*	112	112	135	163	92	92	98	145	95	8	112	97	2	5.3	48
GUBX0*	150	150	153	205	125	125	113	178	125	8	136	114	2	12	78
GUBX0H*	150	150	190	205	125	125	150	178	125	8	136	114	2	16	91
GUBX1*	200	200	157	255	173	173	110	228	178	10	189	163	2	23	122
GUBX1H*	200	200	197	255	173	173	150	228	178	10	189	163	2	27	143
GUBX1PF*	176	176	137	220	150	150	95	196	154	10	170	147	2	23	95
GUBX2*	252	252	160	305	225	225	106	275	232	10	235	206	4	30	181
GUBX3*	258	258	215	310	225	225	165	285	228	10	235	206	4	37	222
GUBX3L*	360	360	225	430	325	325	185	395	318	10	348	320	4	91	293
GUBX4*	450	450	290	530	410	410	228	485	410	10	437	406	4	180	466
GUBX4A*	450	450	220	530	410	410	158	485	410	10	437	406	4	155	400
GUBX5*	540	540	370	640	510	510	288	595	510	16	540	504	4	216	749

Mass is valid for empty enclosure, it will increase according to integrated components and cable glands. Values might differ slightly due to manufacturing tolerances. For custom designed solutions, such as for different temperature ranges, dimensions and mass may differ.

Flanged Panel Solutions

The combination of Ex d enclosures and Ex e control stations provides improved functionality. Normal industrial electrical components are installed in the Ex d part of the assembly, while certified Ex e control and monitoring elements as well as terminals and cable glands are installed in the Ex e enclosure, which is easy to access for field installation and maintenance. The stainless steel flange between the enclosures ensures protection of the Ex e control station and prevents dirt buildup and moisture penetration.

Flanged Panels Ex de, Bushed Panels Ex de

Combining Ex d and Ex e protection provides protection of non-Ex equipment, fast commissioning, and easy modification. A wide range of sturdy, flameproof enclosures is available to protect equipment from explosion and environmental hazards. Each "bushed" solution is customized to meet the requirements of the specific application. To design an optimal solution, experienced project engineers in Pepperl+Fuchs' Solution Engineering Centers are in close contact with the customer for the duration of the project. Each solution is shipped to the location of operation with full certification and documentation. Commissioning is fast and easy as there is no need to open the Ex d enclosure on-site.

Ex de solutions consist of a combination of a flameproof enclosure and an increased safety Ex e enclosure, which includes terminals and operating elements in customized installations. The enclosures are securely connected via a special cable duct. A flange between the enclosures prevents dirt buildup and moisture penetration.

Components for measuring and control technology, or electrical installation technology, that are not specifically designed for hazardous areas can be installed in the flameproof enclosure. In addition to isolated barriers from Pepperl+Fuchs, these components may include DCS and ESD systems and other instruments tailored to user specifications. The Ex d enclosure ensures that the non-Ex devices do not pose a threat to the environment. Ideally this enclosure will be opened as little as possible after initial installation because IEC 60079-14 requires special rules to be observed during opening and closing. The increased safety enclosure contains only Ex e certified components. This makes it much easier and safer to access than the Ex d enclosure. Terminals and control and monitoring elements can be serviced or replaced at any time, subject to compliance with the relevant provisions.

This way, customers can reap the benefits offered by both types of protection. The Ex e enclosures allow for easy extension and modification of the operating elements that they contain. The controllers in the Ex d enclosure are ready for use and allow rapid commissioning with little plant downtime and reduced maintenance.

For more information, visit
pepperl-fuchs.com/pf-controlpanels-exde

Control and Distribution Panels in Aluminum/Stainless Steel (FP.*.FS*)

Features

- Aluminum and stainless steel enclosures
- Ex de and Ex tb certified
- Integration of electrical components and operating elements in Ex d enclosures as per customer specification
- Customizable configuration of operators, terminals, and cable entries as per specification
- Various enclosure sizes and designs
- Installation in Zones 1/21 and 2/22
- Choice of viewing windows for monitoring instruments

Function

Ex d and Ex e control and distribution panels are combined in an efficient, flanged assembly that provides improved functionality. Normal industrial electrical components are installed in the Ex d part of the assembly, while certified Ex e components like LED status indicators, push buttons, control switches, ammeters, and connection terminals are installed in the Ex e enclosure, which is easy to access. During field installation, cables are easily connected inside the Ex e enclosure with Ex e cable glands and the appropriate terminals. This means field-installed Ex d cable glands and barrier glands are not necessary and enables safe operation and easy maintenance of the complete assembly.

Technical Data		
Electrical specifications	Operating voltage	1000 V DC/1500 V AC max.
	Operating current	recommended: 1600 A max.
Mechanical specifications	Enclosure range	details of Ex e enclosure see datasheet Control Stations FXLS*
	Dimensions	see data table values might differ slightly due to casting and manufacturing tolerances
	Enclosure cover	see data table
	Cover seal	none, O-ring for IP66/67
	Degree of protection	IP66 (IP66/67 with O-ring)
Material	Enclosure	Aluminum alloy or AISI 316L, (1.4404) stainless steel
	Finish	epoxy coated RAL 7005 (grey) or shot peened
Ambient conditions	Ambient temperature	–50 ... 60 °C (–58 ... 140 °F), depending on integrated components
Data for application in connection with hazardous areas	EU-Type Examination Certificate	see data table
	Maximum power dissipation	see data table, maximum power dissipation at T4/+40 °C
International approvals	IECEx approval	see data table
	Further approvals	available on request
For further technical data, please refer to individual datasheets.		

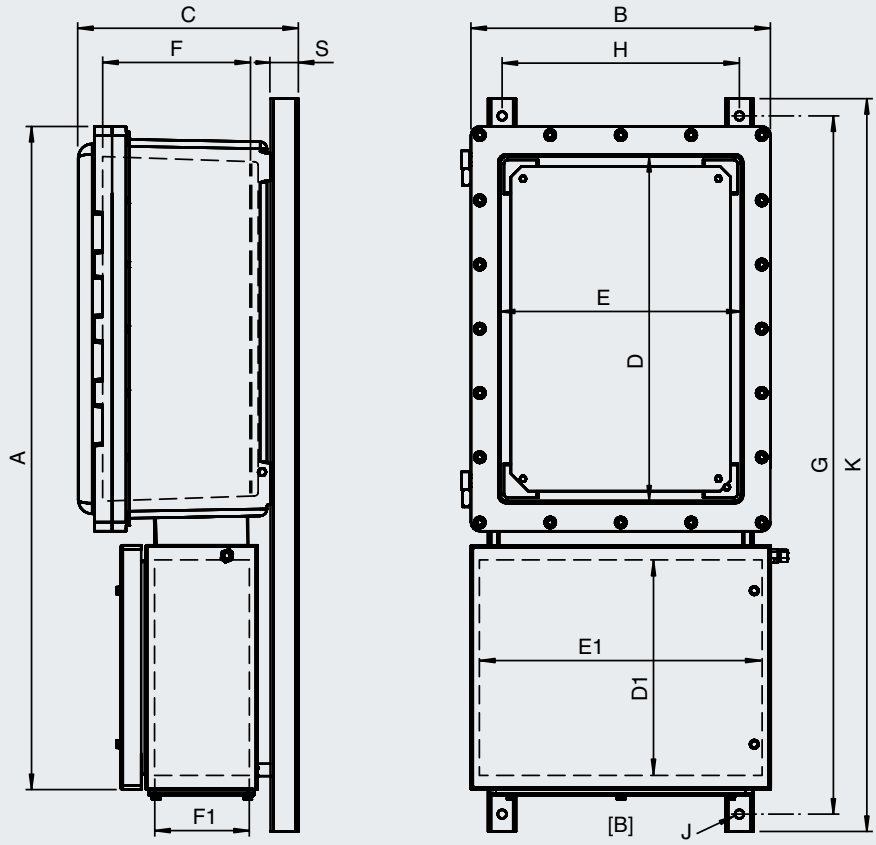

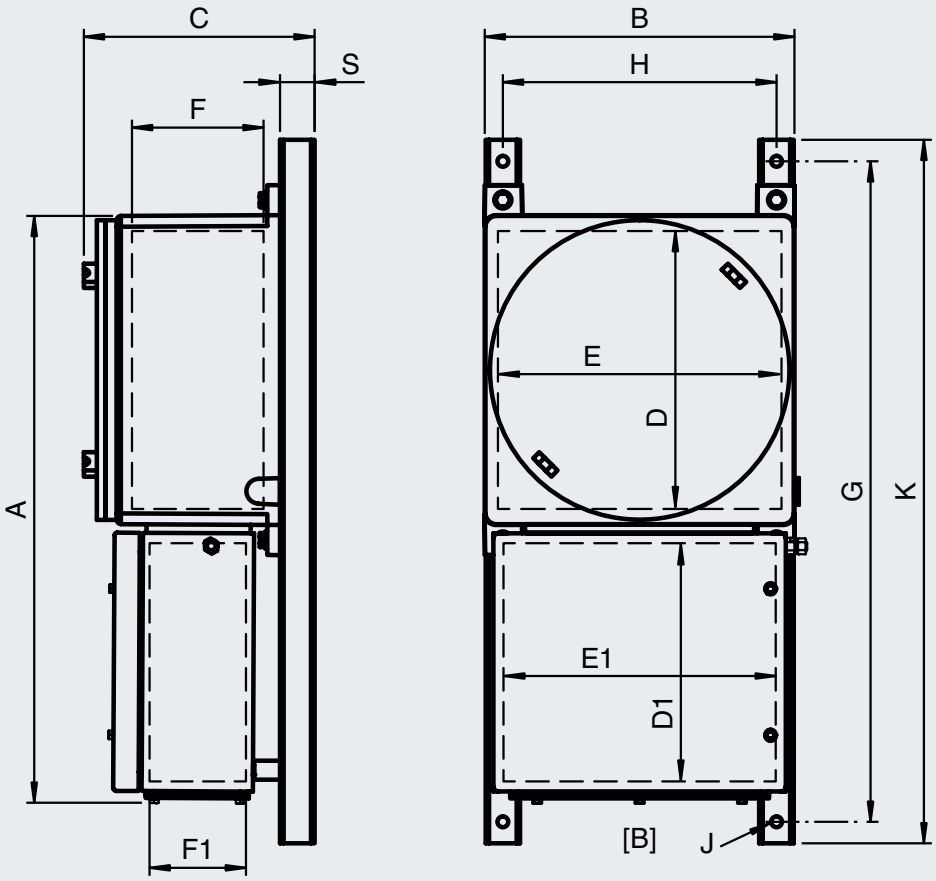

See data table for dimension values. Image and drawing are generic for this device type and may deviate from the specific version.

For more information, visit:

Control and Distribution Panels (Ex de)

Selection Table Ex d IIB+H_2

Type	Ex d enclosure material	External dimensions [mm]					Mounting [mm]			Sketch
		A	B	C	K	S	G	H	J	
FP.EJB8B.FS02B	**Aluminum alloy**	657	290	272	738	40	688	200	12.5	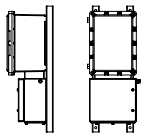
FP.EJBX8B.FS02B	**Stainless steel**	638	268	270.5	738	40	688	250	12.5	
FP.EJB10B.FS04B	**Aluminum alloy**	774	358	300	847.5	40	797.5	250	12.5	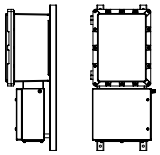
FP.EJBX10B.FS04B	**Stainless steel**	764	340	303.5	847.5	40	797.5	320	12.5	
FP.EJB15A.FS05B	**Aluminum alloy**	981.5	452	320	1070	40	1020	340	12.5	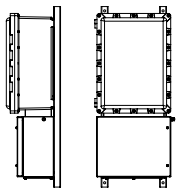
FP.EJBX15A.FS05B	**Stainless steel**	963	430	303.5	1070	40	1020	430	12.5	
FP.EJB15A.FS05C	**Aluminum alloy**	1181.5	452	320	1270	40	1220	340	12.5	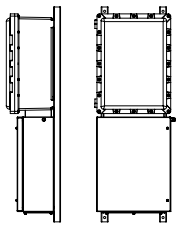
FP.EJBX15A.FS05C	**Stainless steel**	1135	430	303.5	1270	40	1220	430	12.5	
FP.EJB17Q.FS07.5B	**Aluminum alloy**	1035.5	630	400	1103	40	1053	483	12.5	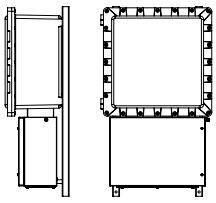
FP.EJBX17Q.FS07.5B	**Stainless steel**	1015	594	356.5	1103	40	1053	583	12.5	
FP.EJB18B.FS06B	**Aluminum alloy**	1174	538	440	1233	40	1183	415	12.5	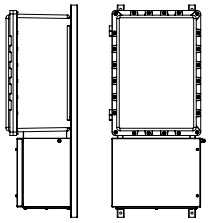
FP.EJBX18B.FS06B	**Stainless steel**	1150	524	406.5	1243.5	40	1193.5	505	12.5	
FP.EJB18B.FS06BT	**Aluminum alloy**	1174	538	440	1233	40	1183	415	12.5	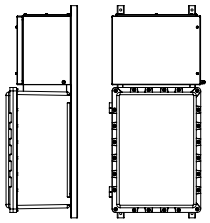

Type	Ex d enclosure material	External dimensions [mm]					Mounting [mm]			Sketch
		A	B	C	K	S	G	H	J	
FP.EJB18B.FS06C	**Aluminum alloy**	1504	538	440	1563	40	1513	415	12.5	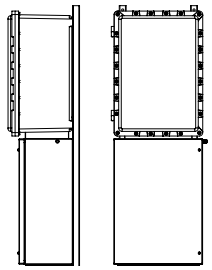
FP.EJB18BL.FS08B	**Aluminum alloy**	1018.5	751	440	1117	40	1067	509	12.5	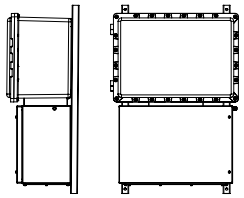
FP.EJB20A.FS08B	**Aluminum alloy**	1393	687	531	1439	40	1389	510	12.5	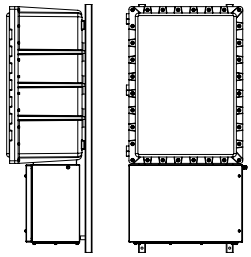
FP.EJBX20A.FS08B	**Stainless steel**	1387	672	475.5	1454.5	40	1404.5	630	12.5	
FP.EJB20A.FS08BT	**Aluminum alloy**	1393	687	531	1439	40	1389	510	12.5	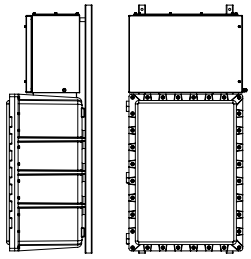
FP.EJB20A.FS08C	**Aluminum alloy**	1693	687	531	1739	40	1689	510	12.5	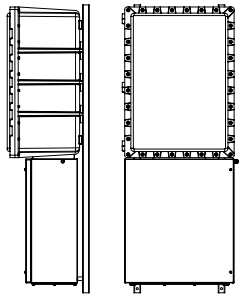
FP.EJB20AL.FS09B	**Aluminum alloy**	1305	937	531	1376.5	40	1326.5	668	12.5	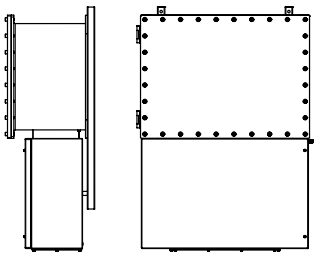

Control and Distribution Panels (Ex de)

Selection Table Ex d IIC

Type	Ex d enclosure material	External dimensions [mm]					Mounting [mm]			Sketch
		A	B	C	K	S	G	H	J	
FP.GUB1H.FS01B	**Aluminum alloy**	440	220	214	580	40	530	178	12.5	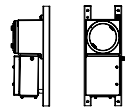
FP.GUBX1H.FS01B	**Stainless steel**	441	201	225	580	40	530	178	12.5	
FP.GUB3L.FS04B	**Aluminum alloy**	668	358	253	817.5	40	767.5	318	12.5	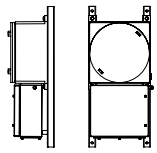
FP.GUBX3L.FS04B	**Stainless steel**	657	347	258	811	40	761	318	12.5	
FP.GUB4.FS05B	**Aluminum alloy**	807.5	447.5	310	958	40	908	410	12.5	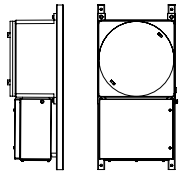
FP.GUBX4.FS05B	**Stainless steel**	814	454	322	959.5	40	909.5	410	12.5	
FP.GUB5.FS07	**Aluminum alloy**	961	555	401	1128	40	1078	500	12.5	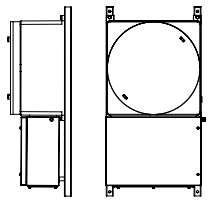
FP.GUBX5.FS07	**Stainless steel**	950	555	380	1120.5	40	1070.5	495	12.5	

Data for application in connection with hazardous areas

Type	Operating voltage [V max.]	Operating current [A max.]	EU-Type Examination Certificate	Marking	IECEx approval
FP.EJB*	1000 V DC 1500 V AC	1600	INERIS 14 ATEX 0022X CML 16 ATEX 3009X	Ex II 2 GD Ex db IIB+H_2 T* Gb Ex tb IIIC T** °C Db T6/T85 °C @ Ta +60 °C T5/T90 °C @ Ta +60 °C T4/T120 °C @ Ta +60 °C T3/T140 °C @ Ta +60 °C with window Ex e enclosure: Ex de ib IIC T6, T5, T4 Gb	IECEx INE 14.0029X IECEx CML 16.0008X
FP.GUB*	1000 V DC 1500 V AC	1600	INERIS 14 ATEX 0035X CML 16 ATEX 3009X	Ex II 2 GD Ex db IIC T* Gb Ex tb IIIC T** °C Db T6/T85 °C @ Ta +60 °C T5/T90 °C @ Ta +60 °C T4/T120 °C @ Ta +60 °C T3/T140 °C @ Ta +60 °C with window Ex e enclosure: Ex de ib IIC T6, T5, T4 Gb	IECEx INE 14.0042X IECEx CML 16.0008X

Internal Dimensions and Enclosure Details

Type	Ex d enclosure material	Ex d enclosure internal dimensions [mm]			Ex e enclosure internal dimensions [mm]			Mass approx. [kg]	Max. power dissipation at T4/+40 °C Ex d enclosure [W]
		D	E	F	D1	E1	F1		
FP.EJB8B.FS02B	**Aluminum alloy**	300	200	186	203	209	145	30	236
FP.EJBX8B.FS02B	**Stainless steel**	300	200	195	203	209	145	47	236
FP.EJB10B.FS04B	**Aluminum alloy**	370	260	215	253	279	145	40	356
FP.EJBX10B.FS04B	**Stainless steel**	370	260	225	253	279	145	80	353
FP.EJB15A.FS05B	**Aluminum alloy**	500	350	219	303	369	195	72	540
FP.EJBX15A.FS05B	**Stainless steel**	500	350	220	303	369	195	115	540
FP.EJB15A.FS05C	**Aluminum alloy**	500	350	219	503	369	195	77	540
FP.EJBX15A.FS05C	**Stainless steel**	500	350	220	503	369	195	121	540
FP.EJB17Q.FS07.5B	**Aluminum alloy**	500	500	278	353	494	205	110	593
FP.EJBX17Q.FS07.5B	**Stainless steel**	500	500	270	353	494	205	168	593
FP.EJB18B.FS06B	**Aluminum alloy**	640	427	318	353	454	295	127	864
FP.EJBX18B.FS06B	**Stainless steel**	640	430	320	353	454	295	194	864
FP.EJB18B.FS06BT	**Aluminum alloy**	640	427	318	353	454	295	127	864
FP.EJB18B.FS06C	**Aluminum alloy**	640	427	318	683	454	295	163	864
FP.EJB18BL.FS08B	**Aluminum alloy**	427	640	318	403	599	295	131	864
FP.EJB20A.FS08B	**Aluminum alloy**	805	555	393	403	599	295	229	1616
FP.EJBX20A.FS08B	**Stainless steel**	800	550	380	403	599	295	354	1616
FP.EJB20A.FS08BT	**Aluminum alloy**	805	555	393	403	599	295	229	1616
FP.EJB20A.FS08C	**Aluminum alloy**	805	555	393	800	550	380	240	1616
FP.EJB20AL.FS09B	**Aluminum alloy**	555	805	393	553	849	295	241	1616
FP.GUB1H.FS01B	**Aluminum alloy**	170	170	150	183	139	125	16	143
FP.GUBX1H.FS01B	**Stainless steel**	173	173	150	183	139	125	35	143
FP.GUB3L.FS04B	**Aluminum alloy**	325	325	183	253	279	145	34	293
FP.GUBX3L.FS04B	**Stainless steel**	325	325	185	253	279	145	105	293
FP.GUB4.FS05B	**Aluminum alloy**	410	410	215	303	369	195	62	466
FP.GUBX4.FS05B	**Stainless steel**	410	410	228	303	369	195	168	466
FP.GUB5.FS07	**Aluminum alloy**	513	513	269	353	494	205	86	749
FP.GUBX5.FS07	**Stainless steel**	510	510	288	353	494	205	241	749

Switch Disconnectors and Safety Switches

DIS* switch disconnectors and SAF* safety switches guarantee safe shutdown of machines during cleaning, maintenance, and repair. They can be utilized in hazardous areas up to Zone 1/21. Various main and auxiliary contact configurations cover many switching requirements. Enclosures are available in high-quality stainless steel and rugged GRP material.

DIS—Switch Disconnectors

Pepperl+Fuchs' range of Ex e switch disconnectors ensures safe operation of motors, engines, and drives in hazardous areas. Enclosure materials include stainless steel and glass fiber reinforced polyester. 3-pole, 4-pole, and 6-pole amperage options are available. A variety of auxiliary contact configurations ensure optimal operation and the valve actuator can be triple padlocked in the OFF position.

SAF—Safety Switches

Safety switches offer the same functionalities as switch disconnectors. Furthermore, the enclosure cover can only be opened when the switch is in the ON position, in accordance with IEC 62626-1.

For more information, visit
pepperl-fuchs.com/pf-switching-exe

Switch Disconnectors/Safety Switches (DIS.*/SAF.*)

Features

- Various contact configurations and pole numbers
- Labeling '0 - I'
- Ex db eb and Ex tb certified
- Installation in Zones 1/21 and 2/22
- Glass fiber reinforced polyester (GRP) enclosure
- Stainless steel enclosure
- Padlockable switch
- Function-adequate cable gland configurations

Function

DIS* switch disconnectors and SAF* safety switches guarantee safe disconnection of machines from the power supply during cleaning, maintenance, and repair. They can be utilized in hazardous areas up to Zone 1/21. Various main and auxiliary contact configurations cover many switching requirements. Enclosures are available in high-quality stainless steel and rugged GRP material. In accordance with IEC 62626-1, the enclosure cover of SAF* versions can only be opened when the switch is in ON position.

Technical Data		
Electrical specifications	Operating voltage	690V max. (400V for 16A)
	Operating current	16A, 25A or 40A max.
	Rated impulse withstand voltage	6 kV
	Rated frequency	50/60 Hz
	Short circuit current limitation	recommended: 16 A : 25 A, gG/25 A : 35 A, gG/40 A : 63 A, gG
	Short circuit current limitation	800 V
Mechanical specifications	Enclosure cover	fully detachable
	Degree of protection	IP66
	Switching configuration	2 position changeover with left OFF
	Color	black and red
	Labeling	0 – I
	Operator action	engage – engage
	Lockable	in 'OFF' position threefold padlockable
Material	Enclosure	carbon loaded, antistatic glass fiber reinforced polyester (GRP) or AISI 316L, (1.4404) stainless steel
	Finish	inherent color black or brushed
Ambient conditions	Ambient temperature	–40 ... 55 °C (–40 ... 131 °F) @ T4
Data for application in connection with hazardous areas	EU-Type Examination Certificate	CML 16 ATEX 3009X
	Marking	Ex II 2 GD, Ex db eb IIC T* Gb, Ex tb IIIC T** °C Db, T4/T130 °C @ Ta +55 °C
International approvals	IECEx approval	IECEx CML 16.0008X
	CCC	2020322304002545
	UKCA	CML 22UKEX2550X
	Further approvals	available on request

For further technical data, please refer to individual datasheets.

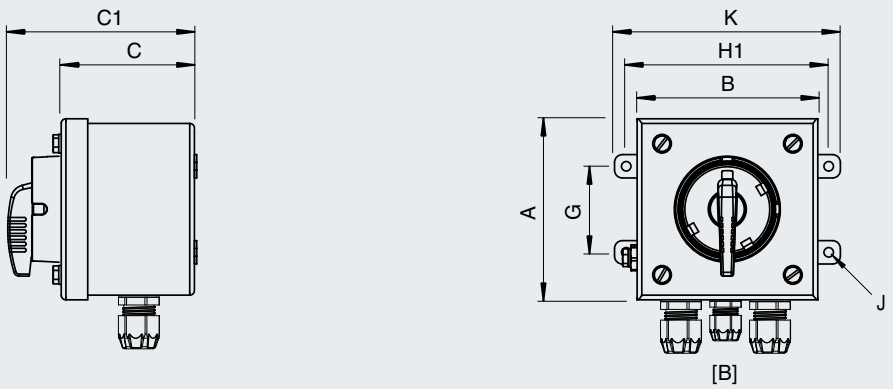

SRS

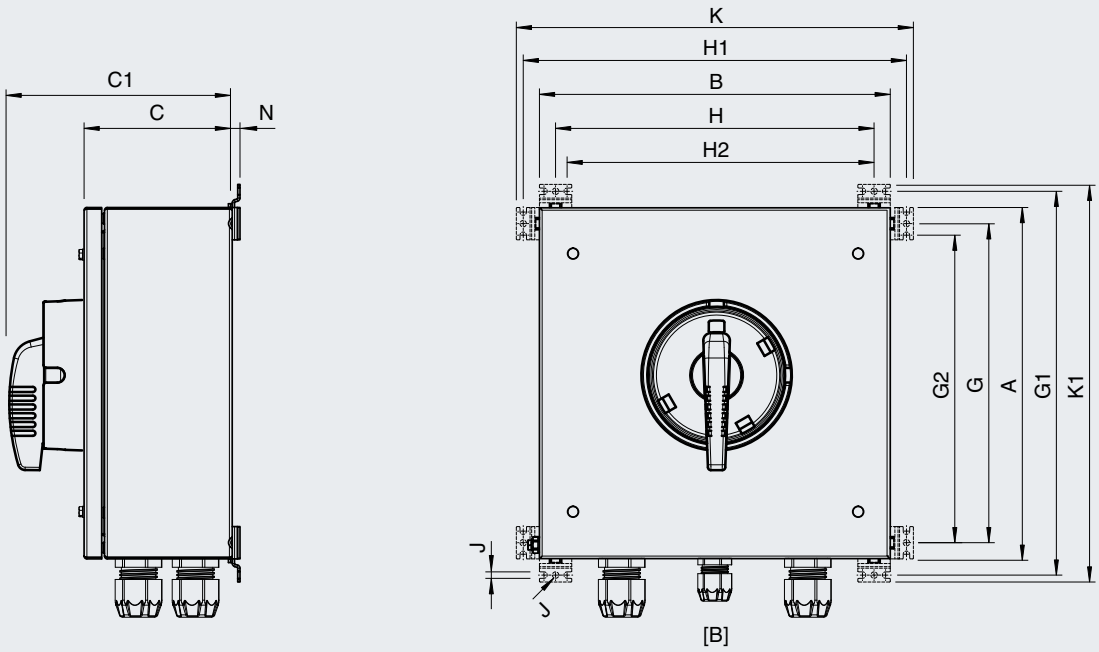

SRM

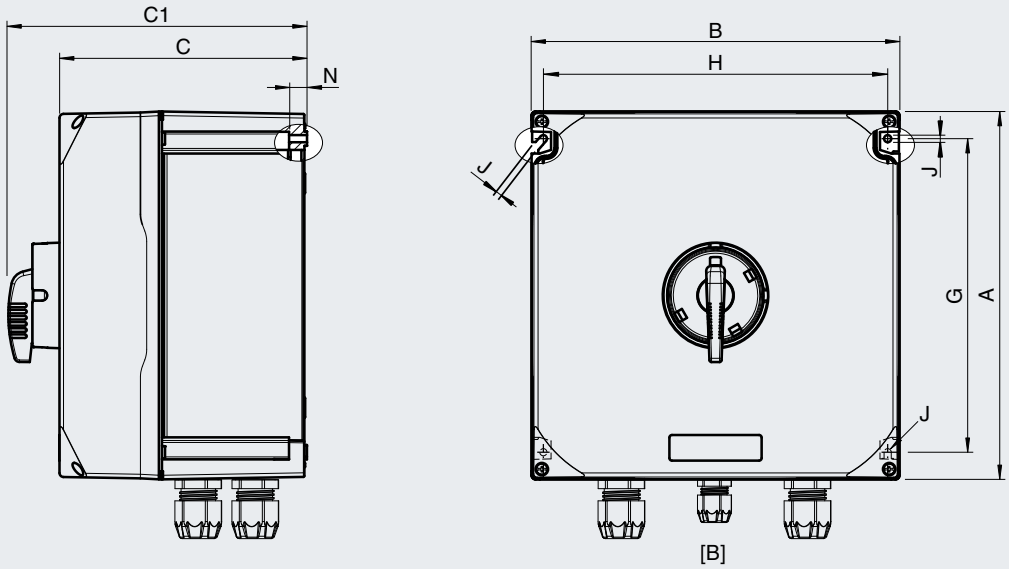

GR

See data table for dimension values. Image and drawing are generic for this device type and may deviate from the specific version.

Switch Disconnectors and Safety Switches (Ex e)

Dimensions and Enclosure Details	Enclosure series	External dimensions [mm]						Mounting [mm]								Mass approx. [kg]
Type		A	B	C	C1	K	K1	G	G1	G2	H	H1	H2	N	J	
Switch disconnectors in GRP enclosures																
DIS.P.016.3P.1NO.GR	GR	129	129	85	136			96			114			13	5	
DIS.P.025.3P.GR	GR	179	179	104	154	-	-	126	-	-	156	-	-	18	7	2.1
DIS.P.025.3PN.GR	GR	179	179	104	154	-	-	126	-	-	156	-	-	18	7	2.2
DIS.P.025.3P.1NO.GR	GR	179	179	104	154	-	-	126	-	-	156	-	-	18	7	2.2
DIS.P.025.6P.1NO.1NC.GR	GR	179	359	166.5	216.5	-	-	156	-	-	336	-	-	18	7	4.3
DIS.P.040.3P.GR	GR	179	359	166.5	216.5	-	-	156	-	-	336	-	-	18	7	4.8
DIS.P.040.3PN.GR	GR	179	359	166.5	216.5	-	-	156	-	-	336	-	-	18	7	4.85
DIS.P.040.3P.1NO.GR	GR	179	359	166.5	216.5	-	-	156	-	-	336	-	-	18	7	4.85
DIS.P.040.6P.1NO.1NC.GR	GR	359	359	241.5	291.5	-	-	306	-	-	336	-	-	18	7	9
Switch disconnectors in stainless steel enclosures																
DIS.S.016.3P.1NO.SR	SRS	142	116	86	143	145		81				130		1.5	6.1	
DIS.S.025.3P.SR	SRS	156	156	94	144	185	-	95	-	-	-	170	-	1.5	6.1	2.5
DIS.S.025.3PN.SR	SRS	156	156	94	144	185	-	95	-	-	-	170	-	1.5	6.1	2.5
DIS.S.025.3P.1NO.SR	SRS	156	156	94	144	185	-	95	-	-	-	170	-	1.5	6.1	2.5
DIS.S.025.6P.1NO.1NC.SR	SRM	260	260	160	210	310	310	225	295	212.5	225	295	212.5	8.5	7	6.5
DIS.S.040.3P.SR	SRM	260	260	160	210	310	310	225	295	212.5	225	295	212.5	8.5	7	6.3
DIS.S.040.3PN.SR	SRM	260	260	160	210	310	310	225	295	212.5	225	295	212.5	8.5	7	6.3
DIS.S.040.3P.1NO.SR	SRM	260	260	160	210	310	310	225	295	212.5	225	295	212.5	8.5	7	6.3
DIS.S.040.6P.1NO.1NC.SR	SRM	260	260	220	270	310	310	225	295	212.5	225	295	212.5	8.5	7	7
Safety switches in GRP enclosures																
SAF.P.025.3P.1NO.GR	GR	179	179	104	154	-	-	126	-	-	156	-	-	18	7	2.2
SAF.P.040.3P.1NO.GR	GR	179	359	166.5	216.5	-	-	156	-	-	336	-	-	18	7	4.85
Safety switches in stainless steel enclosures																
SAF.S.025.3P.1NO.SR	SRS	156	156	91.5	144	185	-	95	-	-	-	170	-	1.5	6.1	2.5
SAF.S.040.3P.1NO.SR	SRM	260	260	160	210	310	310	295	225	212.5	225	295	282.5	8.5	7	6.3

Mass is valid for empty enclosure, it will increase according to integrated components and cable glands.

For more information, visit:

Electrical Data	Operating current [A max.]	Main contacts			Auxiliary contacts	
Type		Contact configu-ration	Diagram	Usage category	Contact configuration	Usage category
Switch disconnectors in GRP enclosures						
DIS.P.016.3P.1NO.GR	16	1x NO	D02	AC3: 400 V AC - 16 A/AC23: 400 V AC - 16 A AC12: 400 V AC - 16 A/AC15: 400 V AC - 10 A DC13: 110 V DC - 1 A	1x NO delayed, advanced opening	AC12: 400 V AC - 16 A/DC13: 110 V DC - 1 A
DIS.P.025.3P.GR	25	3x NO	D01	AC23: 690 V AC - 16 A/500 V AC - 20 A/400 V AC - 25 A AC3: 690 V AC - 16 A/500 V AC - 20 A/400 V AC - 25 A	-	-
DIS.P.025.3PN.GR	25	4x NO	D02	AC23: 690 V AC - 16 A/500 V AC - 20 A/400 V AC - 25 A AC3: 690 V AC - 16 A/500 V AC - 20 A/400 V AC - 25 A	-	-
DIS.P.025.3P.1NO.GR	25	3x NO	D03	AC23: 690 V AC - 16 A/500 V AC - 20 A/400 V AC - 25 A AC3: 690 V AC - 16 A/500 V AC - 20 A/400 V AC - 25 A	1x NO delayed, advanced opening	AC11: 500 V AC - 20 A
DIS.P.025.6P.1NO.1NC.GR	25	6x NO	D03	AC23: 690 V AC - 16 A/500 V AC - 20 A/400 V AC - 25 A AC3: 690 V AC - 16 A/500 V AC - 20 A/400 V AC - 25 A	1x NO delayed, advanced opening/1x NC	AC11: 500 V AC - 20 A
DIS.P.040.3P.GR	40	3x NO	D01	AC23: 690 V AC - 32 A/500 V AC - 40 A/400 V AC - 40 A AC3: 690 V AC - 32 A/500 V AC - 40 A/400 V AC - 40 A	-	-
DIS.P.040.3PN.GR	40	4x NO	D02	AC23: 690 V AC - 32 A/500 V AC - 40 A/400 V AC - 40 A AC3: 690 V AC - 32 A/500 V AC - 40 A/400 V AC - 40 A	-	-
DIS.P.040.3P.1NO.GR	40	3x NO	D03	AC23: 690 V AC - 32 A/500 V AC - 40 A/400 V AC - 40 A AC3: 690 V AC - 32 A/500 V AC - 40 A/400 V AC - 40 A	1x NO delayed, advanced opening	AC11: 500 V AC - 20 A
DIS.P.040.6P.1NO.1NC.GR	40	6x NO	D04	AC23: 690 V AC - 32 A/500 V AC - 40 A/400 V AC - 40 A AC3: 690 V AC - 32 A/500 V AC - 40 A/400 V AC - 40 A	1x NO delayed, advanced opening/1x NC	AC11: 500 V AC - 20 A
Switch disconnectors in stainless steel enclosures						
DIS.S.016.3P.1NO.SR	16	1xNO	D02	AC3: 400 V AC - 16 A/AC23: 400 V AC - 16 A AC12: 400 V AC - 16 A/AC15: 400 V AC - 10 A DC13: 110 V DC - 1 A	1x NO delayed, advanced opening	AC12: 400 V AC - 16 A/DC13: 110 V DC - 1 A
DIS.S.025.3P.SR	25	3x NO	D01	AC23: 690 V AC - 16 A/500 V AC - 20 A/400 V AC - 25 A AC3: 690 V AC - 16 A/500 V AC - 20 A/400 V AC - 25 A	-	-
DIS.S.025.3PN.SR	25	4x NO	D02	AC23: 690 V AC - 16 A/500 V AC - 20 A/400 V AC - 25 A AC3: 690 V AC - 16 A/500 V AC - 20 A/400 V AC - 25 A	-	-
DIS.S.025.3P.1NO.SR	25	3x NO	D03	AC23: 690 V AC - 16 A/500 V AC - 20 A/400 V AC - 25 A AC3: 690 V AC - 16 A/500 V AC - 20 A/400 V AC - 25 A	1x NO delayed, advanced opening	AC11: 500 V AC - 20 A
DIS.S.025.6P.1NO.1NC.SR	25	6x NO	D04	AC23: 690 V AC - 16 A/500 V AC - 20 A/400 V AC - 25 A AC3: 690 V AC - 16 A/500 V AC - 20 A/400 V AC - 25 A	1x NO delayed, advanced opening/1x NC	AC11: 500 V AC - 20 A
DIS.S.040.3P.SR	40	3x NO	D01	AC23: 690 V AC - 32 A/500 V AC - 40 A/400 V AC - 40 A AC3: 690 V AC - 32 A/500 V AC - 40 A/400 V AC - 40 A	-	-
DIS.S.040.3PN.SR	40	4x NO	D02	AC23: 690 V AC - 32 A/500 V AC - 40 A/400 V AC - 40 A AC3: 690 V AC - 32 A/500 V AC - 40 A/400 V AC - 40 A	-	-
DIS.S.040.3P.1NO.SR	40	3x NO	D03	AC23: 690 V AC - 32 A/500 V AC - 40 A/400 V AC - 40 A AC3: 690 V AC - 32 A/500 V AC - 40 A/400 V AC - 40 A	1x NO delayed, advanced opening	AC11: 500 V AC - 20 A
DIS.S.040.6P.1NO.1NC.SR	40	6x NO	D04	AC23: 690 V AC - 32 A/500 V AC - 40 A/400 V AC - 40 A AC3: 690 V AC - 32 A/500 V AC - 40 A/400 V AC - 40 A	1x NO delayed, advanced opening/1x NC	AC11: 500 V AC - 20 A
Safety switches in GRP enclosures						
SAF.P.025.3P.1NO.GR	25	3x NO	D02	AC23: 690 V AC - 16 A/500 V AC - 20 A/400 V AC - 25 A AC3: 690 V AC - 16 A/500 V AC - 20 A/400 V AC - 25 A	1x NO delayed, advanced opening	AC11: 500 V AC - 20 A
SAF.P.040.3P.1NO.GR	40	3x NO	D02	AC23: 690 V AC - 32 A/500 V AC - 40 A/400 V AC - 40 A AC3: 690 V AC - 32 A/500 V AC - 40 A/400 V AC - 40 A	1x NO delayed, advanced opening	AC11: 500 V AC - 20 A
Safety switches in stainless steel enclosures						
SAF.S.025.3P.1NO.SR	40	3x NO	D02	AC23: 690 V AC - 16 A/500 V AC - 20 A/400 V AC - 25 A AC3: 690 V AC - 16 A/500 V AC - 20 A/400 V AC - 25 A	1x NO delayed, advanced opening	AC11: 500 V AC - 20 A
SAF.S.040.3P.1NO.SR	40	3x NO	D02	AC23: 690 V AC - 32 A/500 V AC - 40 A/400 V AC - 40 A AC3: 690 V AC - 32 A/500 V AC - 40 A/400 V AC - 40 A	1x NO delayed, advanced opening	AC11: 500 V AC - 20 A

Mass is valid for empty enclosure, it will increase according to integrated components and cable glands.

Switch Disconnectors and Motor Starters

Based on several versions of flameproof enclosures, a wide variety of switching elements ensure reliable start-up and safe shutdown of machines. Various power ranges, contact configurations, and cable connection options enable configuration of the most efficient solution for any switching requirement whether in gas or dust hazardous environments.

EJB*.D.PS.DIS.—Aluminum

EJB switch disconnectors are based on rugged aluminum enclosures. They are available in several standard versions up to 100 A. Customization of switching components and cable entries allow the solution to be tailored exactly to the specific requirements.

F* SD—Aluminum

The F* SD switch disconnectors are based on certified Ex d and Ex tD enclosures. According to your specification, various contact configurations and pole numbers can be integrated into these rugged aluminum enclosures.

F7-DOL—Aluminum

The F7-DOL is a rugged Ex d and Ex tD certified enclosure for configuring motor starters. They are available with various power ratings and are ready for installation in gas group IIB environments. Standard and customized solutions come with up to 11 kW and comprise contractors, overload, and start/stop operators.

For further information, visit
pepperl-fuchs.com/pf-switching-exd

Switch Disconnectors in Aluminum (EJB*.D.PS.DIS.*)

Features

- Aluminum enclosure
- Ex d and Ex tb certified
- Installation in Zones 1/21 and 2/22
- Various contact configurations and pole numbers
- IP66 rated
- Gas group IIB+H2

Function

Switch disconnectors in sturdy EJB series enclosures guarantee safe disconnection of machines in Zones 1/21 and 2/22 up to gas group IIB+H_2. Several standard versions are available up to 100 A for AC23 and AC3. Customization of switching components and cable entries allow the solution to be tailored exactly to the specific requirements.

Technical Data		
Electrical specifications	Operating voltage	see data table
	Operating current	see data table
	Rated impulse withstand voltage	6 kV
	Rated frequency	50 Hz
	Rated insulation voltage	690 V
Mechanical specifications	Dimensions	see data table, values might differ slightly due to casting and manufacturing tolerances
	Enclosure cover	fully detachable
	Switching configuration	2 position with left OFF
	Color	black with yellow shroud
	Labeling	0 – I
	Operator action	engage - engage
	Lockable	in 'OFF' position
Material	Enclosure	Aluminum alloy
	Finish	epoxy coated RAL 7005 (grey)
Ambient conditions	Ambient temperature	–20 ... 50 °C (–4 ... 122 °F) @ T6
Data for application in connection with hazardous areas	EU-Type Examination Certificate	CML 16 ATEX 3009X
	Marking	Ⓔx II 2 GD, Ex d IIB+H_2 T* Gb, Ex tb IIIC Db
International approvals	IECEx approval	IECEx INE 14.0029X
	UKCA	CML 21UKEX1424X

For further technical data, please refer to individual datasheets.

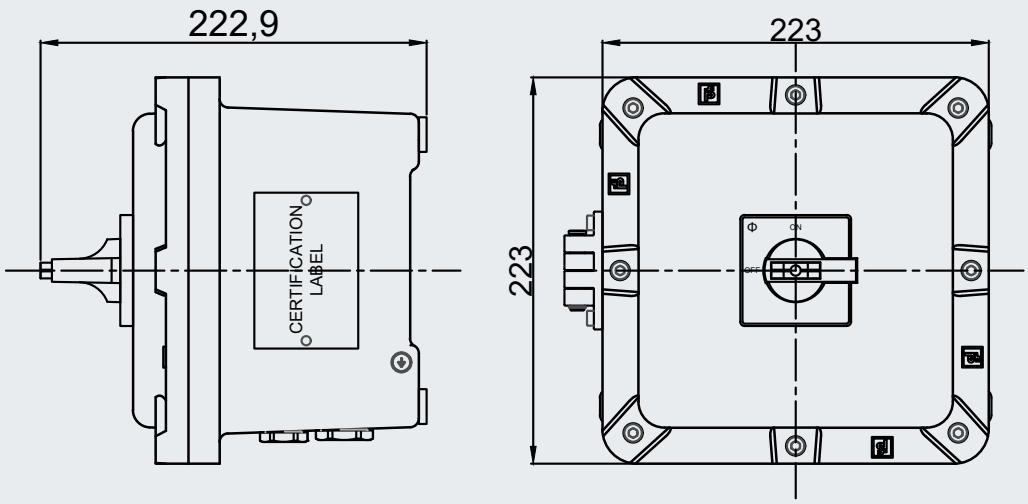

For more information, visit:

Dimensions and Enclosure Details

	External dimensions [mm]					Mounting [mm]			Mass approx. [kg]	Cover screws		
Type	**A**	**B**	**C**	**C1**	**K**	**G**	**H**	**J**		**Mx**	**qty.**	**Torque [Nm]**
EJB2A.D.PS.DIS.025.3PN.2NO	220	220	159	190.2	226	157	206	8	16.4	M6	8	15
EJB4A.D.PS.DIS.063.3PN.2NO	265	225	180	210.5	258	188	206	8	18.5	M8	10	20
EJB4A.D.PS.DIS.100.3PN.2NO	265	225	180	210.5	258	188	206	8	18.5	M8	10	20

Electrical Data

	Operating voltage [V AC max.]	Operating current [A max.]	Short circuit current limitation, recommended	Number of poles	Main contacts		Auxiliary contacts	
Type	**TD**				**Contact confi-guration**	**Usage category**	**Contact configuration**	**Usage category**
EJB2A.D.PS.DIS. 025.3PN.2NO	690	25	35 A, gG	4	4x NO	AC23: 690 V AC – 25 A AC3: 690 V AC – 25 A	2x NO delayed, advanced opening	AC15: 500 V AC – 1.0 A / 440 V AC – 1.5 A / 240 V AC – 2.5 A
EJB4A.D.PS.DIS. 063.3PN.2NO	690	63	63 A, gG	4	4x NO	AC23: 690 V AC – 63 A AC3: 690 V AC – 63 A	2x NO delayed, advanced opening	AC15: 500 V AC – 1.5 A / 440 V AC – 3.0 A / 240 V AC – 6.0 A
EJB4A.D.PS.DIS. 100.3PN.2NO	690	100	100 A, gG	4	4x NO	AC23: 690 V AC – 100 A AC3: 690 V AC – 100 A	2x NO delayed, advanced opening	AC15: 500 V AC – 1.5 A / 440 V AC – 3.0 A / 240 V AC – 6.0 A

All cable entries are closed with appropriate metal stopping plugs. For details, please refer to individual product datasheets.
For further configurations, please contact Pepperl+Fuchs.

For more information, visit:

Switch Disconnectors in Aluminum (F* SD)

Features

- Aluminum enclosure
- Ex d and Ex tD certified
- Installation in Zones 1/21 and 2/22
- Various contact configurations and pole numbers
- IP66 rated

Function

This series of switch disconnectors comprise standard and customized solutions for isolation up to 63 A for AC21A and 18.5 kW for AC3. Standard FW and FC4 versions are available up to 32 A. Customized solutions are based on FC5 and F7 enclosures and include flexible configuration of cable entries and multiple disconnectors in one enclosure.

Technical Data		
Electrical specifications	Operating voltage	see data tables
	Operating current	see data tables
	Rated impulse withstand voltage	6 kV
	Rated frequency	50 Hz
	Rated insulation voltage	690 V
Mechanical specifications	Dimensions	see data tables
	Degree of protection	IP66
	Switching configuration	2 position with left OFF
	Color	black
	Labeling	OFF - ON
	Operator action	engage - engage
	Lockable	in 'OFF' position
Material	Enclosure	Aluminum alloy
	Finish	epoxy coated RAL 7032
Ambient conditions	Ambient temperature	–20 ... 60 °C (–4 ... 140 °F)
Data for application in connection with hazardous areas	EU-Type Examination Certificate	see data tables
International approvals	IECEx approval	see data tables

For further technical data, please refer to individual datasheets.

Electrical Data

Type	Operating voltage [V AC max.]	Operating current [A max.]	Short circuit current limitation	Number of poles	Contact configu-ration	Switching diagram	Usage category
FW201	240	20	25 A, gG	2	2x NO		AC21A: 415 V AC – 20A AC23A: 415 V AC – 3.7 kW
FC4A-203	415	20	25 A, gG	4	4x NO	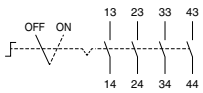	AC21A: 415 V AC – 20A AC23A: 415 V AC – 7.5 kW
FC4C-203	415	32	50 A, gG	4	4x NO		AC21A: 415 V AC – 32A AC23A: 415 V AC – 15 kW
FC4U-203	415	50	63 A, gG	4	4x NO		AC21A: 415 V AC – 63A AC23A: 415 V AC – 30 kW
F7-KG64	415	63	63 A, gG	4	4x NO		AC21A: 415 V AC – 63A AC23A: 415 V AC – 22 kW

FW*

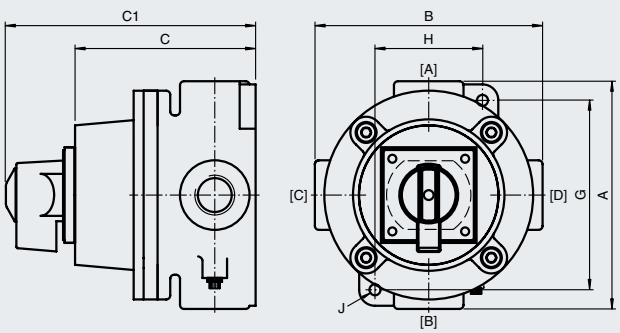

F7*

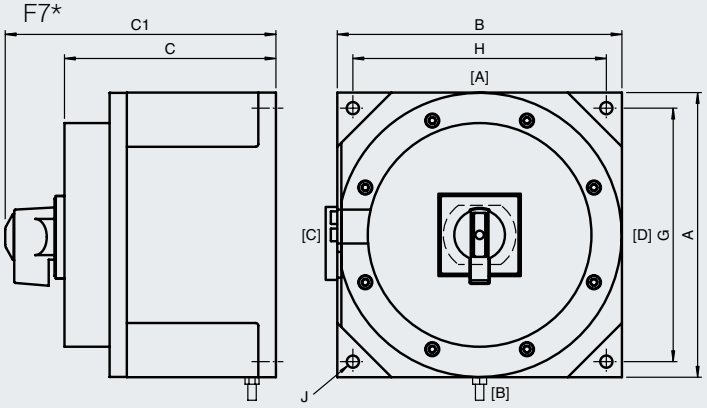

FC4*

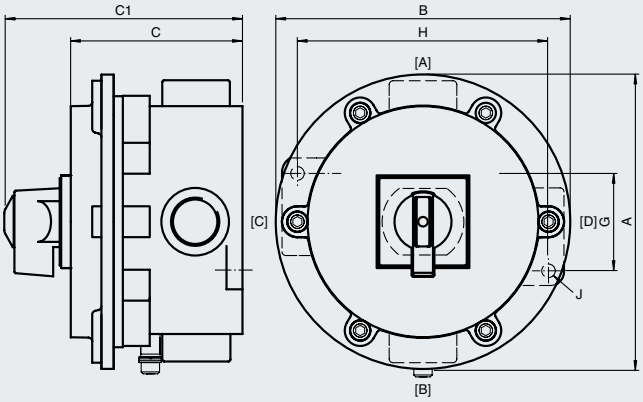

FC5*

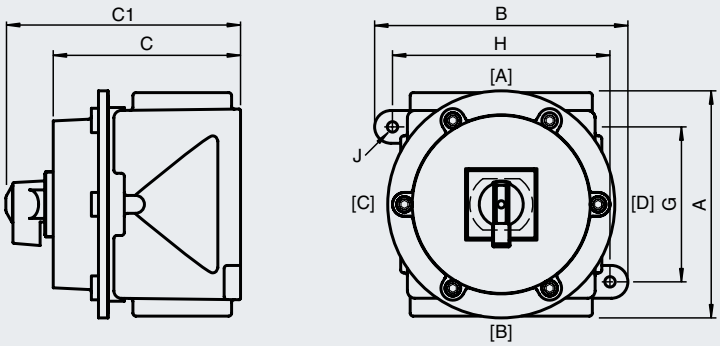

For more information, visit:

Dimensions and Enclosure Details

	Enclosure series	External dimensions [mm]				Mounting [mm]			Mass [kg]	Cover screws			EU-Type Examination Certificate	Marking	IECEx approval
Type		**A**	**B**	**C**	**C1**	**G**	**H**	**J**		**Mx**	**qty.**	**Torque [Nm]**			
FW201	FW	114	114	91	126	54	95	7	1	M6	4	3	SIRA 07 ATEX 1132X	Ex II 2 G Ex d IIB T* Gb T6 @ Ta +60 °C	IECEx TSA 07.0005X
FC4A-203	FC4	152	152	105	140	50	130	7	1.7	M6	6	3	SIRA 07 ATEX 1133X	Ex II 2 GD Ex d IIC T* Gb Ex tD A21 T6/T80 °C @ Ta +60 °C	IECEx SIM 07.0001X
FC4C-203	FC4	152	152	105	140	50	130	7	1.7	M6	6	3	SIRA 07 ATEX 1133X	Ex II 2 GD Ex d IIC T* Gb Ex tD A21 T6/T80 °C @ Ta +60 °C	IECEx SIM 07.0001X
FC4U-203	FC5	152	152	126	161	50	130	7	2.9	M6	6	3	SIRA 07 ATEX 1133X	Ex II 2 GD Ex d IIC T* Gb Ex tD A21 T6/T80 °C @ Ta +60 °C	IECEx SIM 07.0001X
F7-KG64	F7	210	210	156	204	187	187	9	8	M6	8	3	SIRA 07 ATEX 1134	Ex II 2 GD Ex d IIB T* Ex tD A21 T6/T80 °C @ Ta +60 °C	IECEx TSA 07.0029

Motor Starters in Aluminum (F7-DOL*)

Features

- Aluminum enclosure
- Ex d and Ex tD certified
- Installation in Zones 1/21 and 2/22
- Gas group IIB
- Various power ratings available
- 415 V coil
- Suitable for Ex d motors
- IP66 rated

Function

Series F7 enclosures can accommodate DOL motor starters in gas group IIB environments. Standard and customized solutions are available up to 11 kW and comprise contactors, overload, and start/stop operators. Further configuration options are available.

Technical Data		
Electrical specifications	Operating voltage	415 V
	Operating current	see data table
	Function	direct online starter
	Contactor rating	see data table
Mechanical specifications	Enclosure cover	detachable, hinged
	Degree of protection	IP66
Material	Enclosure	Aluminum alloy
	Finish	epoxy coated RAL 7032
Ambient conditions	Ambient temperature	-20 ... 60 °C (-4 ... 140 °F)
Data for application in connection with hazardous areas	EU-Type Examination Certificate	SIRA 07 ATEX 1134
	Marking	Ex II 2 GD, Ex d IIB T*, Ex tD A21, T6/T80 °C @ Ta +60 °C
	Maximum power dissipation	31 W
International approvals	IECEx approval	IECEx TSA 07.0029

For further technical data, please refer to individual datasheets.

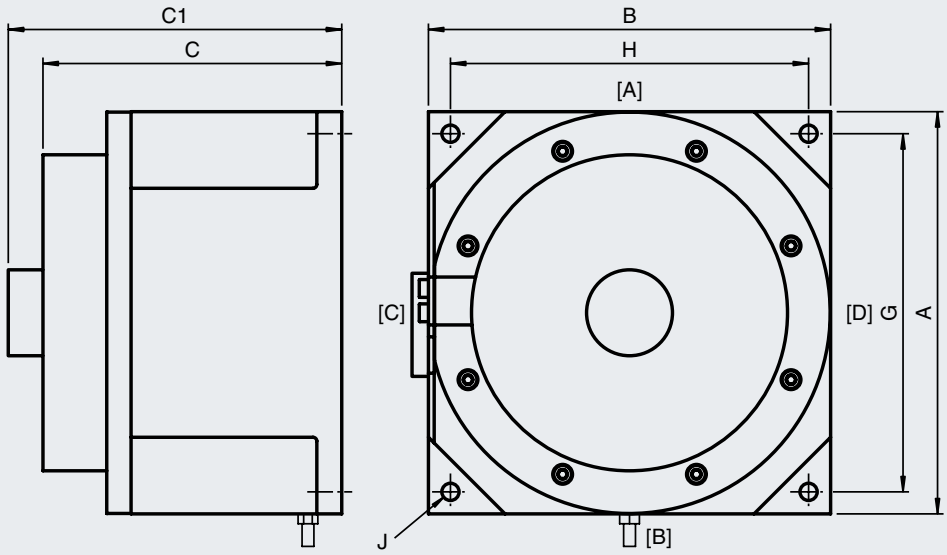

For more information, visit:

Dimensions and Enclosure Details

	External dimensions [mm]				Mounting [mm]			Cable Entries			Terminals	
Type	**A**	**B**	**C**	**C1**	**G**	**H**	**J**	**Face A M20**	**Face B M20**	**Torque [Nm]**	**Capacity [mm²]**	**Torque [Nm]**
F7-DOL*	210	210	158	199	187	187	9	2x Stopping Plug	2x metric ISO pitch 1.5	see datasheets of stopping plugs	4	1.7

Electrical Data

Type	Power [kW]	Current [A]	Coil Voltage [V]	Overload relay [A]	Phases
F7-DOL4	4	9	415	7 ... 10	3
F7-DOL5.5	5.5	11	415	9 ... 13	3
F7-DOL7.5	7.5	14	415	12 ... 18	3

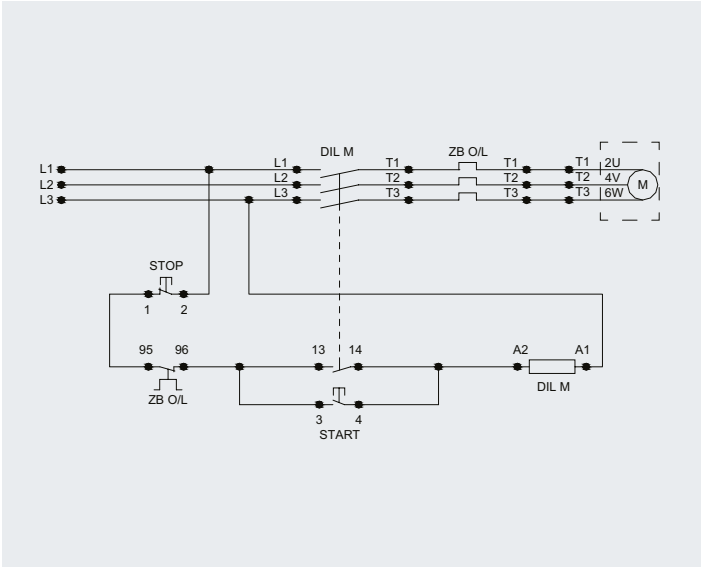

Switching Diagram

Purge and Pressurization Systems

Bebco EPS® purge and pressurization by Pepperl+Fuchs is a household name in the process automation industry. In addition to being a leader in purging technology, Pepperl+Fuchs manufactures innovative solutions that are remarkably easy to use and can handle just about any application.

5500 Series

The Bebco EPS® 5500 series is engineered to provide a global, all-in-one solution for Type Z/Ex pz purge applications. The compact 5500 series is suited for Zone 2 and Division 2 gas or dust hazardous operations. This series also provides a fully automatic system with temperature and pressure monitoring and control for safe operation of purged enclosures in the harshest environments.

6000 Series

The Bebco EPS® 6000 series is designed as the complete solution for Zone 1/21 and Class I or II/Div. 1 hazardous operations. This stainless steel unit incorporates the controller, pneumatics, electrical I/O, and programming interface in one sleek, fully automatic package. With a straightforward user interface that allows easy setup and operation, the 6000 series provides reliable protection for the most demanding applications.

6500 Series

The Bebco EPS® 6500 series Ex px purge and pressurization system sets a new standard for global purge solutions. Designed specifically for Zone 1/21 applications, this fully automatic solution provides a reliable and flexible solution for placing general-purpose equipment in hazardous locations. The 6500 series offers advanced programming capabilities and continuous control of enclosure pressure and temperature to ensure safe operation for a variety of applications in gas or dust hazardous locations.

7500 Series

The Bebco EPS® 7500 series is designed for Class I or II/Div. 2 and Zone 2/22 locations. It is not only provides purged pressurization of the enclosure—it also continuously monitors enclosure conditions, makes automatic pressure adjustments, and provides an output alarm for reliable protection. As a high-end purge and pressurization system, it offers unique features for reliable explosion protection in an extremely compact housing.

For further information, visit
pepperl-fuchs.com/pf-purge

Purge and Pressurization (Ex p) 5500 Series

Features

- 100 % automatic purge and pressurization system including purging, temperature and leakage control, alarming, and system power
- Third party approvals for Class I, II, Div. 2, and Zone 2/22
- Universal mounting
- RTD inputs for temperature alarm and control
- Five standard purge programs

Function

The 5500 series purge and pressurization system consists of a control unit and user interface in a 316 stainless steel enclosure. The unit works in conjunction with EPV vents, and pneumatic solenoid valves or manual valves complete the certified system. The user interface is menu-driven and easily guides users through custom programming for their applications. RTDs can be connected to inputs and the user can select temperature ranges for controlling and alarming critical temperatures through a set of contacts.

Temperature ranges can also be selected to energize a solenoid valve for air displacement within the enclosure or to operate cooling and heating functions. Enclosure pressure, and leakage can be monitored. In the event of a loss in pressure a solenoid valve can engage to restore the defined pressure settings and/or alarm for pressure loss. The 5500 series purge and pressurization system has NEC, CEC, ATEX, and IECEx third party certifications for Class I, II/Div. 2, and Zone 2/22.

Type Code/Model Number

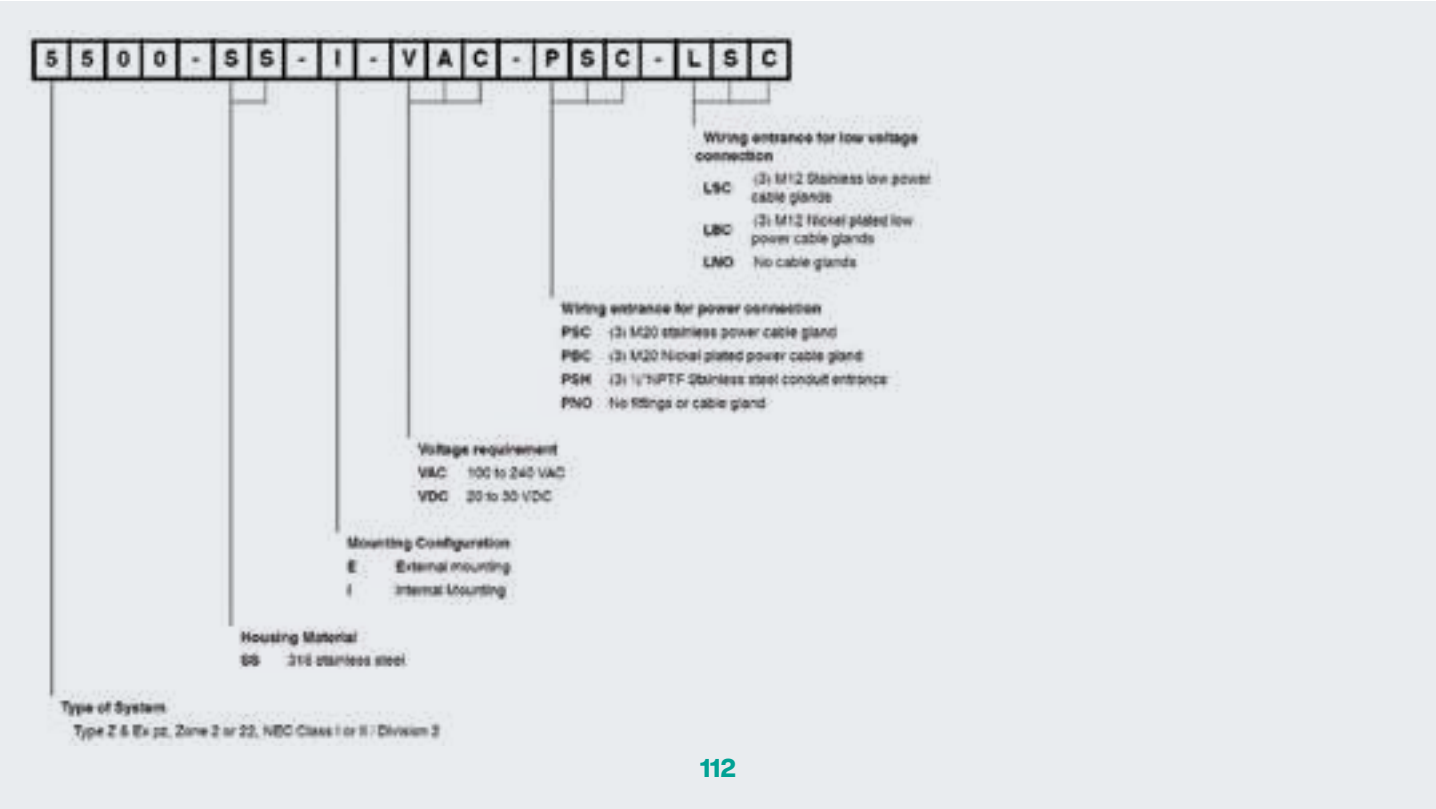

Technical Data

Electrical specifications	Rated voltage	100 ... 240 V AC, 0.05 A, 50 ... 60 Hz, 20 ... 30 V DC, 0.2 A
	Power consumption	100 ... 240 V AC – 2.3 VA (without digital valve) 20 ... 30 V DC – 2.5 W (without digital valve)
Pneumatic parameters	Protective gas supply	instrument grade air or inert gas
	Safe pressure	gas 0.7 mbar (0.3" H_2O) dust 1.6 mbar (0.65" H_2O)
Mechanical specifications	Dimensions	165 x 124 x 90 mm (6.5 x 4.9 x 3.5 in)
	Connection type	High pressure port: 1/8" NPTF Low pressure port: 1/8" NPTF
	Cable gland	Wire size M12 diameter 3 – 6.5 mm M20 diameter 10 – 14 mm RTD/Bypass: (3) M12x1.5 K1, K2, SV1: 'P_C' (3) M20x1.5
	Degree of protection	Type 4X, IP66
	Mass	approx. 2.7 kg (6 lb)
	Material	Housing: 316 stainless steel Cable Gland: 316 stainless steel or nickel-plated brass Pressure Ports: 316 stainless steel Membrane Pad: Autotex F200XE O-ring: EPDM
Ambient conditions	Ambient temperature	–20 ... 40 °C (–4 ... 104 °F) at T6 –20 ... 60 °C (–4 ... 140 °F) at T4
	Relative humidity	5 ... 90 %, non-condensing
	Vibration resistance	5 ... 100 Hz, 1 g, 12 m/s2, all axes
	Impact resistance	30 g, 11 ms, all axes
	Shock resistance	EN 60068-2
Data for application in connection with hazardous areas	Certificate	DEMKO 14 ATEX 1282X
	Marking	Ⓔx II 3 G Ex ic ec nC [ic pzc] IIC T4 Gc (-20 °C ≤ Ta ≤ 60 °C) Ⓔx II 3 G Ex ic ec nC [ic pzc] IIC T6 Gc (-20 °C ≤ Ta ≤ 40 °C) Ⓔx II 3 D Ex ic tc [ic pzc, IIIC] IIIB T80 °C Dc (-20 °C ≤ Ta ≤ 60 °C) (external version) Ⓔx II 3 D Ex ic tc [ic pzc, IIIC] IIIB T60 °C Dc (-20 °C ≤ Ta ≤ 40 °C) (external version) Ⓔx II 3 D Ex ic tc [ic pzc] IIIC T80 °C Dc (-20 °C ≤ Ta ≤ 60 °C) (internal version) Ⓔx II 3 D Ex ic tc [ic pzc] IIIC T60 °C Dc (-20 °C ≤ Ta ≤ 40 °C) (internal version)
International approvals	IECEx approval	IECEx UL 14.0019X Ex ic ec nC [ic pzc] IIC T4 Gc (-20 °C ≤ Ta ≤ 60 °C) Ex ic ec nC [ic pzc] IIC T6 Gc (-20 °C ≤ Ta ≤ 40 °C) Ex ic tc [ic pzc, IIIC] IIIB T80 °C Dc (-20 °C ≤ Ta ≤ 60 °C) (external version) Ex ic tc [ic pzc, IIIC] IIIB T60 °C Dc (-20 °C ≤ Ta ≤ 40 °C) (external version) Ex ic tc [ic pzc] IIIC T80 °C Dc (-20 °C ≤ Ta ≤ 60 °C) (internal version) Ex ic tc [ic pzc] IIIC T60 °C Dc (-20 °C ≤ Ta ≤ 40 °C) (internal version)
	UL approval cULus	UL File E184741 Class I, Division 2, Groups A, B, C, D T4 (-20 °C ≤ Ta ≤ 60 °C) Class II, Division 2, Groups F, G, T4 (-20 °C ≤ Ta ≤ 60 °C) Class I, Division 2, Groups A, B, C, D T6 (-20 °C ≤ Ta ≤ 40 °C) Class II, Division 2, Groups F, G T6 (-20 °C ≤ Ta ≤ 40 °C)

For further technical data, please refer to individual datasheets.

For more information, visit:
pepperl-fuchs.com/pf-purge-5500

Purge and Pressurization (Ex p) 6000 Series

Features

- Certified for Class I, Class II, Division I; Zone 1/21 to non-hazardous
- Intrinsically safe electrical/pneumatic manifold assembly
- Intrinsically safe user interface for programming and monitoring the system
- Enclosure volume up to 450 ft3 (12.7 m³)
- Control unit monitors system operation and controls enclosure power
- Universal mounting (brackets included)
- Type 4X 316L stainless steel enclosure

Function

The 6000 series consists of a control unit (EPCU) and user interface (UIC) mounted in a Type 4X (IP66) 316L stainless steel enclosure with a pneumatic solenoid valve mounted on the unit. The EPV-6000 relief vent is separate and is mounted to the enclosure.

The user interface allows programming of up to 4 switch inputs, temperature modules, enclosure power contacts, 2 auxiliary outputs, and various operational functions. Also, the user interface screen allows monitoring and easy configuration.

Additional features include inputs for system bypass, enclosure power on/off, temperature overload and activation of rapid exchange flow for cooling source, and delay power shutdown. Component kits are available for custom installations.

Type Code/Model Number

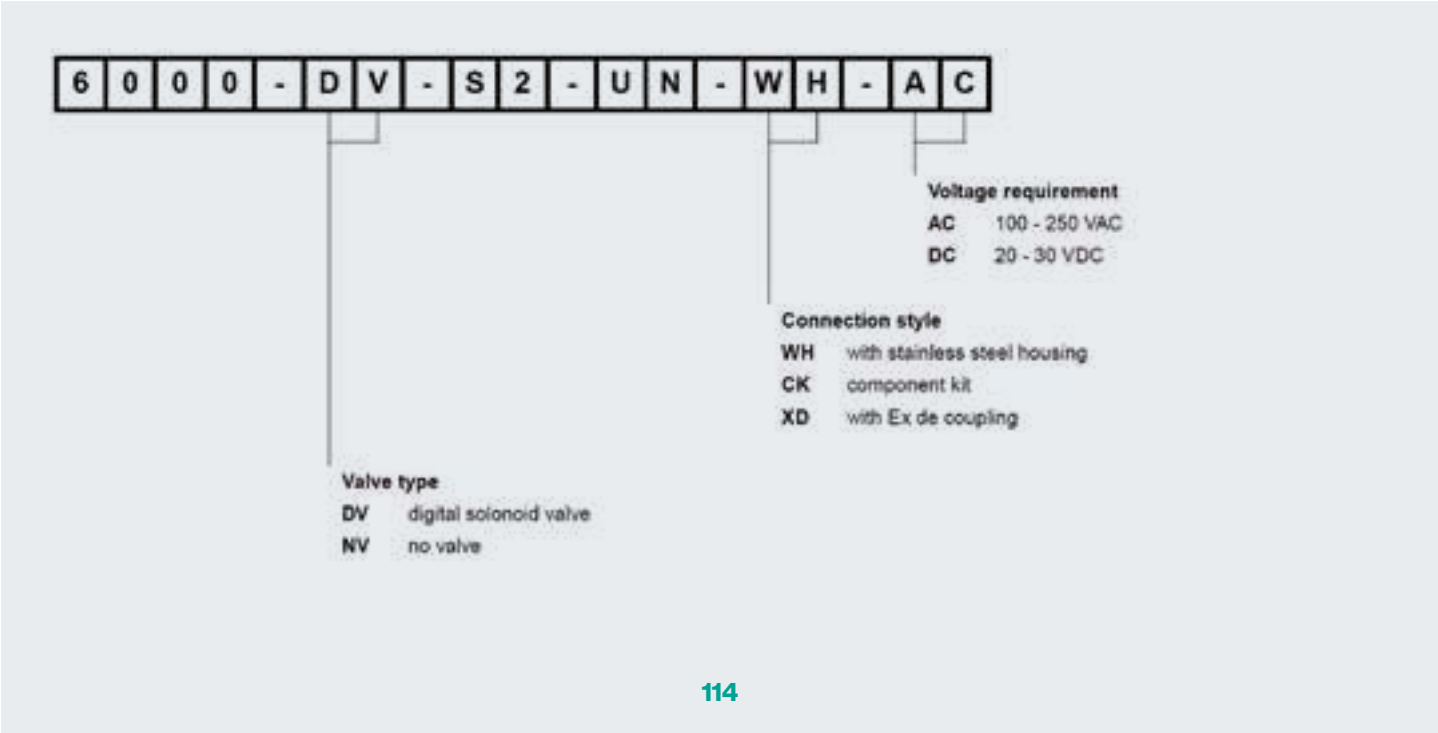

Technical Data

Electrical specifications	Rated voltage	90 ... 264 V AC, 48 ... 62 Hz/0.2 A, 20 ... 30 V DC
Pneumatic parameters	Protective gas supply	instrument grade air or inert gas
	Pressure requirement	gas 0.7 mbar (0.3" H_2O), dust 1.6 mbar (0.65" H_2O)
	Safe pressure	Gas: 0.25" wc (6.4 mm wc) (0.625 mbar) (62 Pa) Dust: 0.65" wc (16.5 mm wc) (1.6 mbar) (162 Pa) Gas and Dust: 0.65" wc (16.5 mm wc) (1.6 mbar) (162 Pa)
	Purge flow rate	Maximum flow rate measurement for enclosure size (enclosure volume : flow rate): < 20 ft^3 (0.57 m^3): 5, 12 SCFM (56, 141, 340 l/min), or dynamic 20 ... 30 ft^3 (0.57 ... 0.85 m^3): 5, 12, 20 SCFM (56, 141, 340, 565 l/min), or dynamic > 30 ft^3 (0.85 m^3): 5, 12, 20, 30 SCFM (56, 141, 340, 565, 850 l/min), or dynamic
	Purge flow and enclosure pressure rate	please refer to individual data sheet
	Flow rate for leakage compensation	please refer to individual data sheet
Mechanical specifications	Dimensions	183 x 367.5 x 152.5 mm (7.20 x 14.45 x 6.00 in)
	Connection type	Pneumatic: Inlet fitting to manifold: 3/8" NPT (female) Outlet fitting from manifold: 3/8" bulkhead fitting (provided)
	Cable gland	4 – M16 x 1.5 cable gland
	Degree of protection	Type 4X, IP66
	Mass	-WH- 11.4 kg (25 lb), -CK- 7.2 kg (16 lb)
	Material	Enclosure: 316L (UNS S31603) stainless steel, Manifold valve: anodized 6082 aluminum Fittings: 316L (UNS S31603) stainless steel
Ambient conditions	Ambient temperature	–20 ... 60 °C (–4 ... 140 °F)
	Storage temperature	–30 ... 80 °C (–22 ... 176 °F)
	Relative humidity	5 ... 95 %, noncondensing
	Vibration resistance	5 ... 100 Hz, 1 g, 12 m/s2, all axes
	Impact resistance	30 g, 11 ms, all axes
Data for application in connection with hazardous areas	EU-Type Examination Certificate	see below
	Marking	6000 main control unit with housing 6000-xx-S2-UN-xx-xx: ATEX UL/Demko 07 ATEX 0705753X Ⓔx II 2 G Ex db [ib pxb] IIC T4 Gb (-20 °C ≤ Ta ≤ 60 °C) Ⓔx II 2 D Ex ib tb [ib pxb] IIIC T60 °C Db (-20 °C ≤ Ta ≤ 50 °C) 6000 main control unit kit version 6000-xx-S2-UN-CK-xx: ATEX UL/Demko 07 ATEX 0705753X Ⓔx II 2 G Ex db [ib pxb] IIC T4 Gb (-20 °C ≤ Ta ≤ 60 °C) Ⓔx II 2 D Ex tb [ib pxb] IIIC T80 °C Db (-20 °C ≤ Ta ≤ 60 °C) User interface 6000-UIC-xx: ATEX UL/Demko 07 ATEX 0705753X Ⓔx II 2 G Ex ib [pxb] IIC T4 Gb
International approvals	UL approval	6000 Main control unit with housing 6000-xx-S2-UN-xx-xx: cULus Class I, Division 1, Groups A,B,C,D T4 (-20 °C ≤ Ta ≤ 60 °C) Class II, Division 1, Groups E,F,G T4 (-20 °C ≤ Ta ≤ 50 °C) Class I, Zone 1, Group IIC T4 (-20 °C ≤ Ta ≤ 60 °C) Class II, Zone 21, Group IIIC T60 °C (-20 °C ≤ Ta ≤ 50 °C) [Ex i] Associated Equipment Ex db [ib pxb] IIC T4 (-20 °C ≤ Ta ≤ 60 °C) Ex db tb [ib pxb] IIIC T4 (-20 °C ≤ Ta ≤ 50 °C) 6000 Main control unit kit version 6000-xx-S2-UN-CK-xx: cULus Class I, Division 1, Groups A,B,C,D T4 (-20 °C ≤ Ta ≤ 60 °C) Class II, Division 1, Groups E,F,G T4 (-20 °C ≤ Ta ≤ 60 °C) Class I, Zone 1, Group IIC T4 Class II, Zone 21, Group IIIC T60 °C [Ex i] Associated Equipment Ex db [ib pxb] IIC T4 X (-20 °C ≤ Ta ≤ 60 °C) Ex db [ib pxb] IIIC T4 X (-20 °C ≤ Ta ≤ 60 °C) User interface 6000-UIC-xx: cULus (-20 °C ≤ Ta ≤ 60 °C) Class I, Division 1, Groups A,B,C,D T4 Class I, Zone 1, Group IIC T4 Ex i Intrinsically safe
	IECEx approval	6000 Main Control unit with housing 6000-xx-S2-UN-xx-xx: IECEx UL 08.0003X Ex db [ib pxb] IIC T4 Gb (-20 °C ≤ Ta ≤ 60 °C) Ex db tb [ib pxb] IIIC T60 °C Db (-20 °C ≤ Ta ≤ 50 °C) 6000 Main control unit kit version 6000-xx-S2-UN-CK-xx: IECEx UL 08.0003X Ex db [ib pxb] IIC T4 Gb (-20 °C ≤ Ta ≤ 60 °C) Ex db [ib pxb] IIIC T80 °C Db (-20 °C ≤ Ta ≤ 60 °C) User interface 6000-UIC-xx: IECEx UL 08.0003X Ex ib [pxb] IIC T4 Gb

For further technical data, please refer to individual datasheets.

For more information, visit:
pepperl-fuchs.com/pf-purge-6000

Purge and Pressurization (Ex p) 6500 Series

Features

- Automatic purge and pressurization system for most applications
- User-friendly, easy programming
- LCD screen for operation status and LEDs for quick visual identification of system
- HART communication through RS-485 with PACTware and device apps through Bluetooth®
- Maximum enclosure size 12.75 cubic meters
- Compact design with panel mounts or direct mounts available
- Universal power 20 to 30 V DC/100 to 250 V AC, 50 to 60 Hz
- Pressure, temperature, dilution control, and monitoring
- Up to SIL 2 acc. to IEC 61508

Function

The 6500 system consists of the 6500 control unit, an EPV-6500 pressure relief and monitoring vent, and a valve for pressurization, purging, and, in some models, dilution for analyzer applications.

The 6500 control unit has a compact design. It consists of a user-interface for programming with an LCD screen for system operation. LEDs provide quick indication of the system status through completely sealed capacitive touch buttons. The unit has a 2-wire RTD input for temperature control/monitoring.

Select models are available for mounting the user-interface to the enclosure wall and the EPCU unit to the back panel or outside of the enclosure for a clean, nonintrusive look. The HART output allows the unit to be connected to a PC using PACTware or the customer's AMS. This is great for remote monitoring and capturing trends and system status updates. An app for Android, Blackberry, and Apple devices allows users to monitor multiple control units using the 6500 series' Bluetooth® connectivity.

Type Code/Model Number

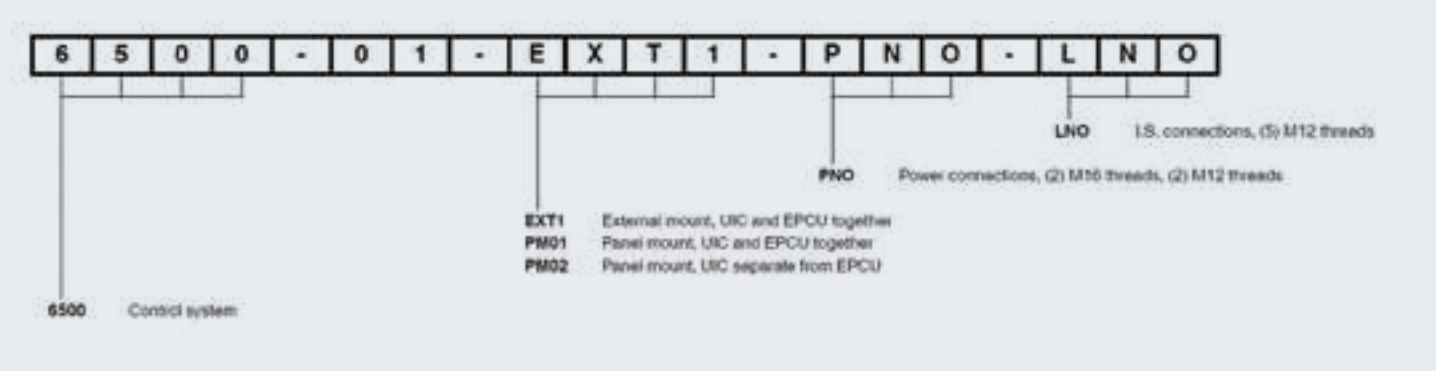

Technical Data

Electrical specifications	Rated voltage	100 ... 240 V AC, 48 ... 62 Hz/0.2 A, 20 ... 30 V DC
Pneumatic parameters	Protective gas supply	instrument grade air or inert gas
	Pressure requirement	For 6500-MAN-DV: 1.4 to 8.3 bar (20 to 120 psig) regulated For 6500-MAN-PV: 3.5 to 6.9 bar (50 to 100 psig) regulated Note: max. pressure will depend on the vent model used. regulated
	Safe pressure	Gas: 0.35" wc (8.88 mm wc) (0.88 mbar/88 pa) Dust: 0.35" wc (8.88 mm wc) (0.88 mbar/88 pa) Gas+Dust: 0.35" wc (8.88 mm wc) (0.88 mbar/88 pa)
	Valve flows	Standard vent series: EPV-6500-*-01, 03, 05 Readout on display is from 56 to 850 l/min (2 to 30 scfm) in increments of 28l/min (1 scfm). Minimum and maximum reading depending on type of vent and supply pressure. See datasheet for EPV-6500 series vent. Continuous (Dilution) vent series: EPV-6500-*-07, 08 Readout on display is from 17 to 226 l/min (0.6 to 8 scfm) continuous reading. Maximum reading depending on type of vent and supply pressure. See data sheet for EPV-6500 series vent.
Mechanical specifications	Dimensions	6500-01-EXT1: 150 x 150 x 145 mm (5.9" x 5.9" x 5.7") 6500-01-PM01: 150 x 150 x 185 mm (5.9" x 5.9" x 7.3") 6500-01-PM02: EPCU: 150 x 150 x 145 mm (5.9" x 5.9" x 5.7"), UIC: 150 x 150 x 45 mm (5.9" x 5.9" x 1.8")
	Connection type	See mounting in 6500 manual and cable gland requirements
	Cable gland	Cable gland requirement: cable glands are not included. Customer can supply there own approved glands or use one of the 6500-CBLG-... cable gland kits. I.S.cable glands: requires (5) M12 approved cable glands Power cable glands: requires (2) M20 and (2) M12 approved cable glands
	Degree of protection	IP66
	Mass	approx. 5 kg (11.0 lbs)
	Material	UIC display: Makrolon FI cover and A380 Aluminum anodized casing Housing: 316L stainless steel Hardware: 316L stainless steel
Ambient conditions	Ambient temperature	–20 ... 70 °C (–4 ... 158 °F)
	Storage temperature	–40 ... 70 °C (–40 ... 158 °F)
	Relative humidity	5 ... 85 %, non-condensing
	Vibration resistance	5 ... 100 Hz, 1 g, 12 m/s2, all axes
	Impact resistance	30 g, 11 ms, all axes
Data for application in connection with hazardous areas	EU-Type Examination Certificate	ATEX UL/DEMKO 15 ATEX 1622X
International approvals	IECEx approval	IECEx UL/DEMKO 15.0147X

For further technical data, please refer to individual datasheets.

For more information, visit:
pepperl-fuchs.com/pf-purge-6500

Purge and Pressurization (Ex p) 7500 Series

Features

- Low cost, compact design, easy to use
- Universal power: AC or DC
- Touch screen display with LEDs for easy visual indication
- Easy setup with preset purge programs for your application
- Automatic pressure compensation with digital manifold
- Rugged, corrosion-resistant housing
- Global third-party approvals for Class I, II, Div. 2 and Zone 2/22

Function

The 7500 series purge and pressurization system consists of a control unit, an enclosure protection vent, and a manual or automatic manifold. The control unit's menu-driven touch screen display makes it easy to select pre-programmed and user-selected variables. The display has 4 LED status indicators that allow users to determine system condition from a distance.

A digital manifold system such as the 5500-MAN- ... can be used to make the 7500 a fully automatic system. Enclosure pressure and leakage are monitored. If a loss in enclosure pressure occurs, the solenoid valve engages to restore the defined pressure settings and/or trigger a pressure drop alarm.

The 7500 series system has NEC, CEC, ATEX, and IECEx third-party certifications for Class I, II/Div. 2 Type Z and Zone 2/22 Ex pzc.

Type Code/Model Number

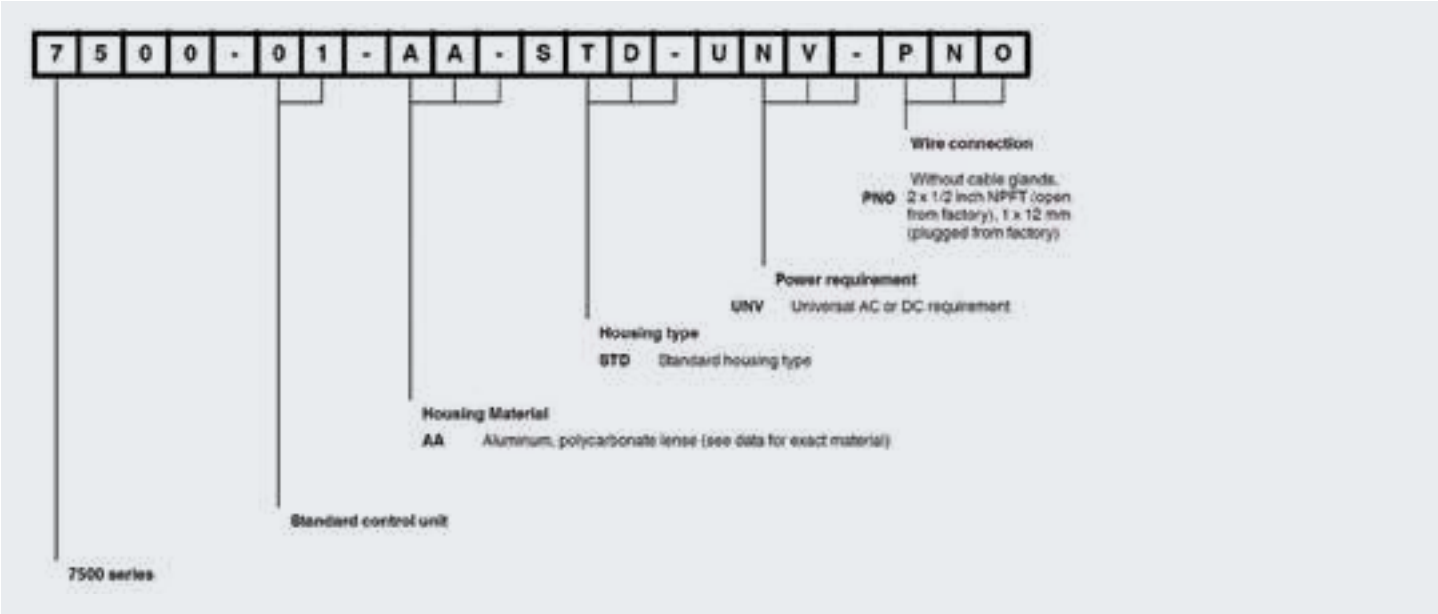

Technical Data

Electrical specifications	Rated voltage	20 ... 30 V DC at 0.1 A 90 ... 250 V AC, 50 ... 60 Hz at 0.04 A without solenoid valve Supply voltage can be line-to-line or line-to-neutral, single phase. OVC II
	Power consumption	max. 2.7 W/7.3 VA without valve
Pneumatic parameters	Protective gas supply	compressed air or inert gas, 5 µm filter, free from oil
	Pressure requirement	supply pressure: 20 ... 120 psig (1.4 ... 8.2 bar)
	Safe pressure	0.25 in wc (0.63 mbar) minimum for gas 0.65 in wc (1.63 mbar) minimum for dust
	Enclosure pressure	0 ... 10 in wc (0 ... 24.8 mbar)
Mechanical specifications	Dimensions	150 x 100 x 50 mm (5.9 x 4 x 2 in)
	Connection type	electrical: 2 x 1/2 in NPTF (open from factory) 1 x M12 opening (plugged from factory) pneumatic: high-pressure port - 1/8 in NPTF, low-pressure port - 1/8 in NPTF
	Degree of protection	Type 4X, IP66
	Mass	710 g (1 lb 10 oz)
	Material	lens: Makrolon® GP-V polycarbonate screws: AISI 316 (1.4401), 304, or 18-8 stainless steel housing: A380, A356, or 6061-T6 aluminum mounting gasket: Bisco® HT-800 medium cellular silicone mounting tabs: SAE 304 stainless steel M12 plug: 6061-T6 aluminum
Ambient conditions	Ambient temperature	Ambient temperature ranges depend on the T class. See the certificates.
	Storage temperature	–40 ... 80 °C (–40 ... 176 °F)
	Relative humidity	5 ... 90 %, non-condensing
	Vibration resistance	5 ... 100 Hz, 1 g, 12 m/s2, all axes
	Impact resistance	30 g, 11 ms, all axes
	Altitude	max. 2000 m
Data for application in connection with hazardous areas	Marking	Ⓔx II 3 G Ex ec nC [pzc] IIC T6...T4 Gc Ⓔx II 3 D Ex tc [pzc] IIIC T60 °C ... T80 °C Dc
International approvals	IECEx approval	Ex ec nC [pzc] IIC T6...T4 Gc Ex tc [pzc] IIIC T60 °C ... T80 °C Dc
	UL approval cULus	Class I, Division 2, Groups A, B, C, D T4 (-40 °C ≤ Ta ≤ 70 °C) Class I, Division 2, Groups A, B, C, D T5 (-40 °C ≤ Ta ≤ 65 °C) Class I, Division 2, Groups A, B, C, D, T6 (-40 °C ≤ Ta ≤ 50 °C) Class II, Division 2, Groups F, G T4 (-40 °C ≤ Ta ≤ 70 °C) Class II, Division 2, Groups F, G T5 (-40 °C ≤ Ta ≤ 65 °C) Class II, Division 2, Groups F, G T6 (-40 °C ≤ Ta ≤ 50 °C)

For further technical data, please refer to individual datasheets.

For more information, visit:
pepperl-fuchs.com/pf-purge-7500

Cable Glands and Accessories

Cable glands and related accessories such as stopping plugs, adapters, and breather drains provide the flexibility needed to design a terminal box or control station to the exact requirements of an application. All components come in many varieties, are made from high-quality materials, and are certified according to the relevant explosion protection standards. Diverse seal materials enable use in wide ambient temperature ranges.

CG.AR—Cable Glands, Metal for Armored Cables

CG.AR metal cable glands provide a combined flameproof seal and environmental seal on the outer and inner sheath of the cable. Typical armors that can be clamped are steel wire armor (SWA), steel wire braided (SWB), steel tape armor (STA), pliable wire armor (PWA) and aluminum wire armor (AWA).

CG.NA—Cable Glands, Metal for Non-Armored Cables

CG.NA metal cable glands are intended for use with non-armored elastomer and plastic insulated cables, providing a combined flameproof and environmental seal on the outer sheath of the cable.

CG.BA—Barrier Glands for Armored Cables

CG.BA metal cable glands are intended for use with armored cables. A two-part system sealing compound provides reliable protection against explosion transmission through the cables. Typical cables that can be clamped are steel wire armor (SWA), steel wire braided (SWB), steel tape armor (STA), pliable wire armor (PWA) and aluminum wire armor.

CG.P—Cable Glands, Plastic

CG.P plastic cable glands are manufactured from special stress-resistant polyamide and offer a variety of thread lengths and clamping ranges for non-armored cables. Versions with blue marking are available for identification of Ex i circuits.

CG.EM—Cable Glands, Metal, for Shielded EMC Cables

CG.EM metal cable glands are designed for use with shielded cables, where the shield is connected to the inner shielding ring of the gland. This provides the necessary EMC protection.

Selected products from the portfolio.
For more information and all available products, visit

Cable Glands, Metal, for Non-Armored Cables (CG.NA.*)

Features

- Cable gland series for non-armored cables
- Nickel-plated brass or AISI 316 stainless steel
- Metric and NPT versions available
- Ex db, Ex eb and Ex tb certified
- Suitable for operation in Zones 1/21 and 2/22
- Suitable for operation in Class I, Zone 1/2/22
- Suitable for operation in Class I, Division 2 when installed in accordance with NEC501.10(B)(2)
- IP66/IP68, UL Type 4X rated

Function

CG.NA metal cable glands can be used indoors and outdoors in Zone 1/21 and Zone 2/22 hazardous areas. They are intended for use with non-armored elastomer and plastic insulated cables, providing a combined flameproof and environmental seal on the outer sheath of the cable.

Technical Data		
Mechanical specifications	Thread type	metric ISO pitch 1.5 mm or NPT ANSI ASME B1.20.1
	Degree of protection	IP66/IP68, UL Type 4X
	Mass	see data table
Material	Cable gland	brass nickel-plated or AISI 316 (1.4401) stainless steel
	O-Ring	chloroprene/neoprene or silicone
	Seal insert	chloroprene/neoprene or silicone
	Washer gasket	aramid fibers bonded with NBR
Ambient conditions	Ambient temperature	Ex e and Ex tb versions: chloroprene seal: –40 ... 80 °C (–40 ... 176 °F) silicone seal: –60 ... 140 °C (–76 ... 284 °F) washer gasket: –50 ... 80 °C (–58 ... 176 °F) sealing plugs: –60 ... 70 °C (–76 ... 158 °F) Ex d versions: chloroprene seal: –40 ... 80 °C (–40 ... 176 °F) silicone seal: –60 ... 80 °C (–76 ... 176 °F) washer gasket: –50 ... 80 °C (–58 ... 176 °F)
Data for application in connection with hazardous areas	EU-Type Examination Certificate	IMQ 14 ATEX 012X
	Marking	Ex II 2 GD Ex d IIC Gb, Ex e IIC Gb, Ex tb IIIC Db
International approvals	cULus	E490324 tested to UL 514B, E490962 tested to UL 2225
	CSA approval	CSA 60079-7, CSA 60079–31
	IECEx approval	IECEx IMQ 14.0004X
	CCC approval	2021312313000344
General information	Scope of delivery	K01 – metric versions, individual component: Cable gland, washer gasket, locknut, earth tag, shroud PVC, brief instructions K01 – NPT versions, individual component: Cable gland, shroud PVC, brief instructions Knn – packing unit with multiple components: Cable glands, brief instructions (1 copy)

For further technical data, please refer to individual datasheets.

Dimensions

1 Washer gasket (accessory)
2 O-Ring
3 Gland body basis
4 Seal insert S3
5 Seal insert S2
6 Seal insert S1
7 Cap nut
D Clamping range, cable sheath diameter
D2 Width across corners
H Length outside enclosure
L Total length
S* Clamping range, seal insert combinations
SW* Width across flats
TD Thread size
TL Thread length

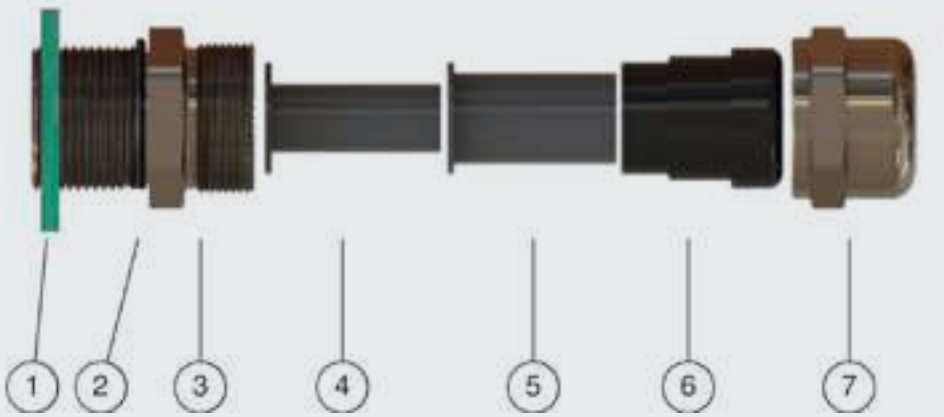

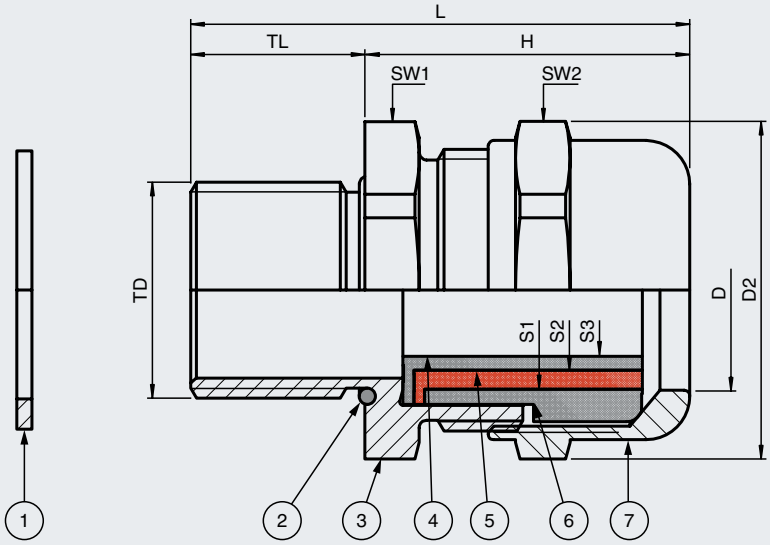

See data tables for details.

Dimensions Metric—Nickel-Plated Brass	Thread size	Clamping range [mm] seal insert combinations				Dimensions [mm]					
Type	**TD**	**D**	**S1+S2+S3**	**S1+S2**	**S1**	**H**	**L**	**TL**	**D2**	**SW1**	**SW2**
CG.NA.M16.BN.C.16.*	M16	4 ... 12	4 ... 6	6 ... 9	9 ... 12	24	40	16	24	22	22
CG.NA.M20S.BN.C.16.*	M20	4 ... 12	4 ... 6	6 ... 9	9 ... 12	24	40	16	24	22	24
CG.NA.M20.BN.C.16.*	M20	10 ... 16	10 ... 12	12 ... 14.5	14.5 ... 16	29	45	16	31	28	28
CG.NA.M25S.BN.C.16.*	M25	10 ... 18	10 ... 12	12 ... 14.5	14.5 ... 18	24	40	16	31	28	28
CG.NA.M25.BN.C.16.*	M25	14 ... 20	14 ... 17	17 ... 20	-	34	50	16	39	35	35
CG.NA.M32S.BN.C.16.*	M32	14 ... 24	14 ... 17	17 ... 20	20 ... 24	27	43	16	39	35	35
CG.NA.M40S.BN.C.18.*	M40	22 ... 32	22 ... 24	24 ... 27	27 ... 32	27	45	18	50	45	45
CG.NA.M50S.BN.C.18.*	M50	26 ... 35	26 ... 28	28 ... 31	31 ... 35	28	46	18	61	55	50
CG.NA.M50.BN.C.18.*	M50	35 ... 44	35 ... 38	38 ... 41	41 ... 44	45	63	18	70	64	64
CG.NA.M63S.BN.C.18.*	M63	35 ... 45	35 ... 38	38 ... 41	41 ... 45	35	53	18	75	68	64
CG.NA.M63.BN.C.18.*	M63	46 ... 56	46 ... 48	48 ... 52	52 ... 56	44	62	18	89	75	80

Details and Accessories Metric—Nickel-Plated Brass	Thread size	Mass approx.		Diameter thru-hole [mm]	Nut torques [Nm] seal insert combinations				Sealing plugs	Delivery quantity
Type	**TD**	**Compo-nent**	**Packaging unit**	**DT**	**SW1**	**SW2 S1+S2+S3**	**SW2 S1+S2**	**SW2 S1**		
CG.NA.M16.BN.C.16.K01	M16	51 g	76 g	16 ... 16.2	4	20	18	16	BP.NA.M16-M20S.PA	-
CG.NA.M16.BN.C.16.K50	M16	51 g	2.81 kg	16 ... 16.2	4	20	18	16	BP.NA.M16-M20S.PA	50
CG.NA.M20S.BN.C.16.K01	M20	48 g	70 g	20 ... 20.2	5.5	20	18	16	BP.NA.M16-M20S.PA	-
CG.NA.M20S.BN.C.16.K50	M20	48 g	2.64 kg	20 ... 20.2	5.5	20	18	16	BP.NA.M16-M20S.PA	50
CG.NA.M20.BN.C.16.K01	M20	65 g	101 g	20 ... 20.2	6	25	22	18	BP.NA.M20-M25S.PA	-
CG.NA.M20.BN.C.16.K50	M20	65 g	3.58 kg	20 ... 20.2	6	25	22	18	BP.NA.M20-M25S.PA	50
CG.NA.M25S.BN.C.16.K01	M25	73 g	110 g	25 ... 25.2	6	25	22	18	BP.NA.M20-M25S.PA	-
CG.NA.M25S.BN.C.16.K25	M25	73 g	2.01 kg	25 ... 25.2	6	25	22	18	BP.NA.M20-M25S.PA	25
CG.NA.M25.BN.C.16.K01	M25	116 g	160 g	25 ... 25.2	6	28	23	–	BP.NA.M25-M32S.PA	-
CG.NA.M25.BN.C.16.K15	M25	116 g	1.91 kg	25 ... 25.2	6	28	23	–	BP.NA.M25-M32S.PA	15
CG.NA.M32S.BN.C.16.K01	M32	115 g	165 g	32 ... 32.3	6	28	23	20	BP.NA.M25-M32S.PA	-
CG.NA.M32S.BN.C.16.K15	M32	115 g	1.9 kg	32 ... 32.3	6	28	23	20	BP.NA.M25-M32S.PA	15
CG.NA.M40S.BN.C.18.K01	M40	211 g	293 g	40 ... 40.3	12	56	50	45	BP.NA.M32-M40S.PA	-
CG.NA.M40S.BN.C.18.K05	M40	211 g	1.16 kg	40 ... 40.3	12	56	50	45	BP.NA.M32-M40S.PA	5
CG.NA.M50S.BN.C.18.K01	M50	327 g	458 g	50 ... 50.3	18	57	55	52	BP.NA.M40-M50S.PA	-
CG.NA.M50S.BN.C.18.K05	M50	327 g	1.8 kg	50 ... 50.3	18	57	55	52	BP.NA.M40-M50S.PA	5
CG.NA.M50.BN.C.18.K01	M50	438 g	613 g	50 ... 50.3	18	190	155	140	BP.NA.M50-M63S.PA	-
CG.NA.M50.BN.C.18.K04	M50	438 g	1.93 g	50 ... 50.3	18	190	155	140	BP.NA.M50-M63S.PA	4
CG.NA.M63S.BN.C.18.K01	M63	468 g	655 g	63 ... 63.3	25	190	155	140	BP.NA.M50-M63S.PA	-
CG.NA.M63S.BN.C.18.K04	M63	468 g	2.06 kg	63 ... 63.3	25	190	155	140	BP.NA.M50-M63S.PA	4
CG.NA.M63.BN.C.18.K01	M63	716 g	891 g	63 ... 63.3	25	160	145	135	BP.NA.M63-M75S.PA	-
CG.NA.M63.BN.C.18.K02	M63	716 g	1.58 kg	63 ... 63.3	25	160	145	135	BP.NA.M63-M75S.PA	2

*Knn: scope of delivery see table technical data. See individual datasheets for further versions in stainless steel and NPT.
All listed cable glands are also available as single parts with the type designation ‘K1’ at the end.

Cable Glands, Metal, for Shielded EMC Cables (CG.EM.*)

Features

- Cable gland series for shielded EMC cables
- Nickel-plated brass or AISI 316 stainless steel
- Metric and NPT versions available
- Ex db, Ex eb and Ex tb certified
- Suitable for operation in Zones 1/21 and 2/22
- Suitable for operation in Class I, Division 2 when installed in accordance with NEC501.10(B)(2)
- IP66/IP68, UL Type 4X rated

Function

Type CG.EM metal cable glands can be used indoors and outdoors in Zone 1/21 and Zone 2/22. They are intended to be used with shielded cables where the shield will be connected to the inner shielding ring of the gland in order to provide the necessary EMC protection.

Technical Data		
Mechanical specifications	Thread type	metric ISO pitch 1.5 mm or NPT ANSI ASME B1.20.1
	Degree of protection	IP66/IP68, UL Type 4X
	Mass	see data table
Material	Cable gland	brass nickel-plated or AISI 316 (1.4401) stainless steel
	O-Ring	chloroprene/neoprene or silicone
	Seal insert	chloroprene/neoprene or silicone
	Washer gasket	aramid fibers bonded with NBR
Ambient conditions	Ambient temperature	Ex e and Ex tb versions: chloroprene seal: –40 ... 80 °C (–40 ... 176 °F) silicone seal: –60 ... 140 °C (–76 ... 284 °F) washer gasket: –50 ... 80 °C (–58 ... 176 °F) sealing plugs: –60 ... 70 °C (–76 ... 158 °F) Ex d versions: chloroprene seal: –40 ... 80 °C (–40 ... 176 °F) silicone seal: –60 ... 80 °C (–76 ... 176 °F) washer gasket: –50 ... 80 °C (–58 ... 176 °F)
Data for application in connection with hazardous areas	EU-Type Examination Certificate	IMQ 14 ATEX 012X
	Marking	Ex II 2 GD Ex d IIC Gb, Ex e IIC Gb, Ex tb IIIC Db
International approvals	cULus	E490324 tested to UL 514B, E490962 tested to UL 2225
	CSA approval	CSA 60079-7, CSA 60079-31
	IECEx approval	IECEx IMQ 14.0004X
	CCC approval	2021312313000344
	UKCA approval	CML 21 UKEX 11380X
General information	Scope of delivery	K01 – metric versions, individual component: Cable gland, washer gasket, locknut, earth tag, shroud PVC, brief instructions K01 – NPT versions, individual component: Cable gland, shroud PVC, brief instructions Knn – packing unit with multiple components: Cable glands, brief instructions (1 copy)

For further technical data, please refer to individual datasheets.

Dimensions

1 Washer gasket (accessory)
2 O-Ring
3 Gland body basis
4 Seal insert S3
5 Seal insert S2
6 Seal insert S1
7 Cap nut
8 EMC spring insert
9 Pressure ring
D Clamping range, cable sheath diameter
D2 Width across corners
H Length outside enclosure
L Total length
S* Clamping range, seal insert combinations
SW* Width across flats
TD Thread size
TL Thread length

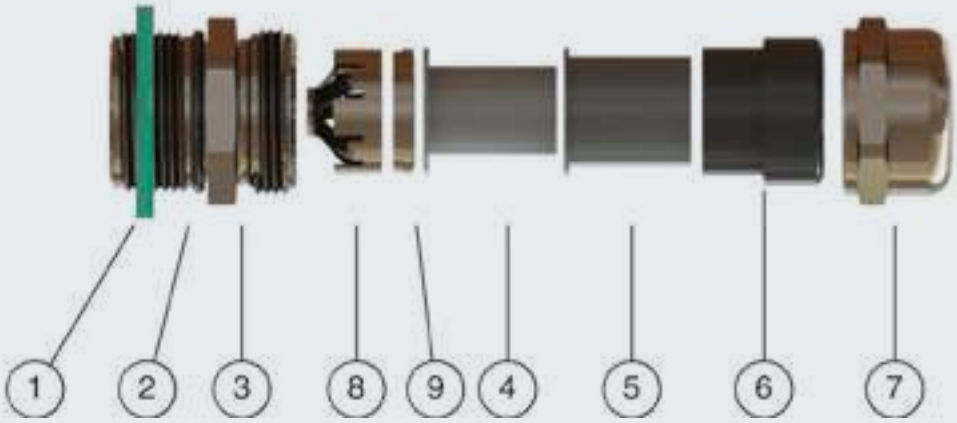

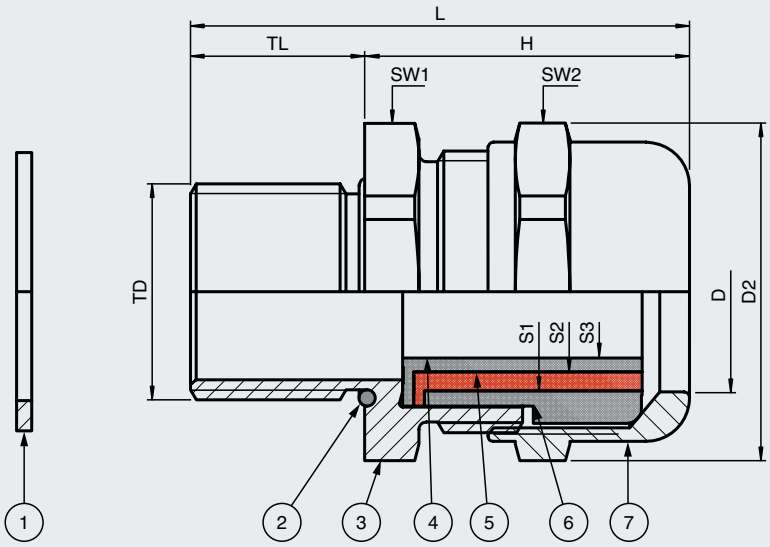

See data tables for details.

Dimensions Metric—Nickel-Plated Brass	Thread size	Clamping range [mm] seal insert combinations				Dimensions [mm]					
Type	**TD**	**D**	**S1+S2+S3**	**S1+S2**	**S1**	**H**	**L**	**TL**	**D2**	**SW1**	**SW2**
CG.EM.M16.BN.C.16.*	M16	4 ... 8	–	4 ... 6	6 ... 8	28.5	44.5	16	24.5	20	20
CG.EM.M20.BN.C.18.*	M20	4 ... 12	4 ... 6	6 ... 9	9 ... 12	26.5	44.5	18	24.5	22	22
CG.EM.M25.BN.C.16.*	M25	10 ... 18	10 ... 12	12 ... 14.5	14.5 ... 18	30	46	16	31	28	28
CG.EM.M32.BN.C.19.*	M32	14 ... 24	14 ... 17	17 ... 20	20 ... 24	33	52	19	39	35	35
CG.EM.M40.BN.C.20.*	M40	22 ... 32	22 ... 24	24 ... 27	27 ... 32	41	61	20	49.5	45	45
CG.EM.M50.BN.C.20.*	M50	26 ... 35	26 ... 28	28 ... 31	31 ... 35	42.5	63.5	20	61	55	50

Details and Accessories Metric—Nickel-Plated Brass	Thread size	Mass approx.		Diameter thru-hole [mm]	Nut torques [Nm] seal insert combinations				Sealing plugs	Delivery quantity
Type	**TD**	**Com-po-nent**	**Packaging unit**	**DT**	**SW1**	**SW2 S1+S2+S3**	**SW2 S1+S2**	**SW2 S1**		
CG.EM.M16.BN.C.16.K01	M16	58 g	87 g	16 ... 16.2	4	–	25	18	BP.NA.M16-M20S.PA	-
CG.EM.M16.BN.C.16.K50	M16	58 g	3.19 kg	16 ... 16.2	4	–	25	18	BP.NA.M16-M20S.PA	50
CG.EM.M20.BN.C.18.K01	M20	56 g	85 g	20 ... 20.2	5.5	20	18	16	BP.NA.M16-M20S.PA	-
CG.EM.M20.BN.C.18.K50	M20	56 g	3.08 kg	20 ... 20.2	5.5	20	18	16	BP.NA.M16-M20S.PA	50
CG.EM.M25.BN.C.16.K01	M25	61 g	92 g	25 ... 25.2	6	25	22	18	BP.NA.M20-M25S.PA	-
CG.EM.M25.BN.C.16.K25	M25	61 g	1.68 kg	25 ... 25.2	6	25	22	18	BP.NA.M20-M25S.PA	25
CG.EM.M32.BN.C.19.K01	M32	116 g	174 g	32 ... 32.3	6	28	23	20	BP.NA.M25-M32S.PA	-
CG.EM.M32.BN.C.19.K15	M32	116 g	1.91 kg	32 ... 32.3	6	28	23	20	BP.NA.M25-M32S.PA	15
CG.EM.M40.BN.C.20.K01	M40	197 g	296 g	40 ... 40.3	12	56	50	45	BP.NA.M32-M40S.PA	-
CG.EM.M40.BN.C.20.K05	M40	197 g	1.08 kg	40 ... 40.3	12	56	50	45	BP.NA.M32-M40S.PA	5
CG.EM.M50.BN.C.20.K01	M50	332 g	498 g	50 ... 50.3	18	57	55	52	BP.NA.M40-M50S.PA	-
CG.EM.M50.BN.C.20.K05	M50	332 g	1.83 kg	50 ... 50.3	18	57	55	52	BP.NA.M40-M50S.PA	5

*Knn: scope of delivery see table technical data.
See individual datasheets for further versions in stainless steel and NPT. All listed cable glands are also available as single parts with the type designation ‘K1’ at the end.

Cable Glands, Metal, for Armored Cables (CG.AR.*)

Features

- Cable gland series for armored cables
- Nickel-plated brass or AISI 316 stainless steel
- Metric and NPT versions available
- Ex d, Ex e and Ex tb certified
- Suitable for operation in Zones 1/21 and 2/22
- Suitable for operation in Class I, Zone 1/2/22
- Suitable for operation in Class I, Division 2 when installed in accordance with NEC501.10(B)(2)
- IP66/IP68, UL Type 4X rated

Function

Type CG.AR metal cable glands can be used indoors and outdoors in Zone 1/21 and 2/22 hazardous areas. They are intended for use with armored cables, providing a combined flameproof seal and environmental seal on the outer and inner sheath of the cable. Typical armors include steel wire armor (SWA), steel wire braided (SWB), steel tape armor (STA), pliable wire armor (PWA) and aluminum wire armor (AWA).

Technical Data		
Mechanical specifications	Thread type	metric ISO pitch 1.5 mm or NPT ANSI ASME B1.20.1
	Degree of protection	IP66/IP68, UL Type 4X
	Mass	see data table
Material	Cable gland	brass nickel-plated or AISI 316 (1.4401) stainless steel
	O-Ring	chloroprene/neoprene or silicone
	Seal insert	chloroprene/neoprene or silicone
	Washer gasket	aramid fibers bonded with NBR
Ambient conditions	Ambient temperature	chloroprene seal: –40 ... 80 °C (–40 ... 176 °F) silicone seal: –60 ... 100 °C (–76 ... 212 °F) washer gasket: –40 ... 80 °C (–40 ... 176 °F)
Data for application in connection with hazardous areas	EU-Type Examination Certificate	CESI 14ATEX033X
	Marking	Ex II 2 GD Ex d IIC Gb, Ex e IIC Gb, Ex tb IIIC Db
International approvals	cULus	E490324 tested to UL 514B, E490962 tested to UL 2225
	CSA approval	CSA 60079-7, CSA 60079-31
	IECEx approval	IECEx CES 14.0022X
	CCC approval	2021312313000346
	PESO approval	A/P/HQ/KA/104/5575
General information	Scope of delivery	K01 – metric versions, individual component: Cable gland, washer gasket, locknut, earth tag, shroud PVC, brief instructions K01 – NPT versions, individual component: Cable gland, shroud PVC, brief instructions Knn – packing unit with multiple components: Cable glands, brief instructions (1 copy)

For further technical data, please refer to individual datasheets.

Dimensions

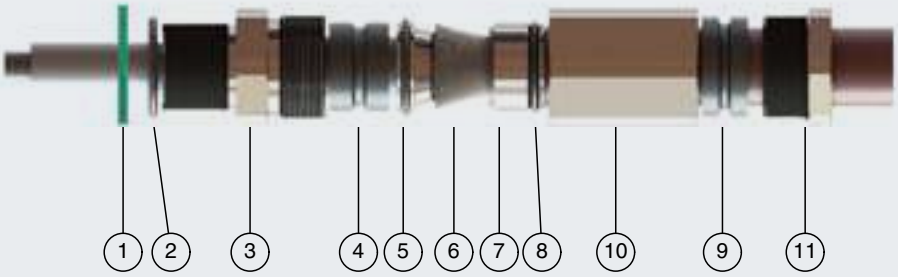

1 Washer gasket (accessory)
2 O-Ring
3 Gland body basis
4 Inner seal insert for cable without armor
5 O-ring
6 Armor cone
7 Armor tightening ring
8 O-ring
9 Outer seal insert for cable including armor
10 Gland body
11 Pressure nut
D Clamping range, cable diameter without armor at inner seal insert
D1 Clamping range, cable sheath diameter with armor at outer seal insert
D2 Width across corners
H Length outside enclosure
L Total length
SW* Width across flats
TD Thread size
TL Thread length

See data tables for details.

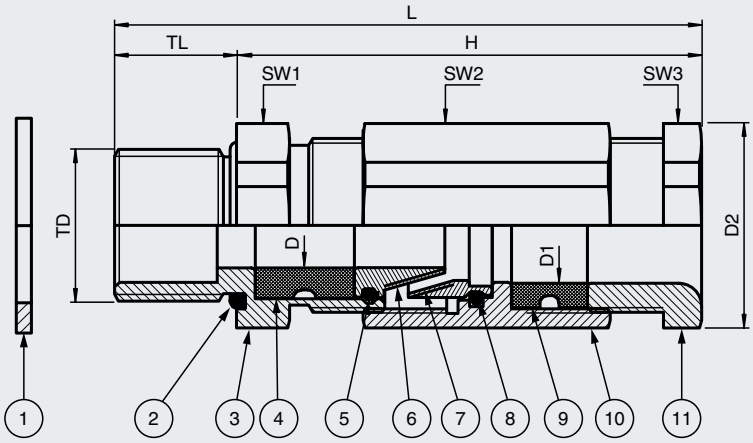

See data tables for details.

Dimensions Metric—Nickel-Plated Brass	Thread size	Clamping range [mm]		Max. armor thickness [mm]	Dimensions [mm]						
Type	**TD**	**D**	**D1**		**H**	**L**	**TL**	**D2**	**SW1**	**SW2**	**SW3**
CG.AR.M16.BN.C.16.*	M16	6 ... 11	8 ... 15	1.3	61	77	16	27	25	25	25
CG.AR.M20.BN.C.16.*	M20	6 ... 11	8 ... 15	1.3	61	77	16	27	25	25	25
CG.AR.M20L.BN.C.16.*	M20	10 ... 15.5	13.5 ... 21	1.3	64	80	16	33	30	30	30
CG.AR.M25S.BN.C.16.*	M25	6 ... 11	8 ... 15	1.3	61	77	16	33	30	25	25
CG.AR.M25.BN.C.16.*	M25	10 ... 15.5	13.5 ... 21	1.3	64	80	16	33	30	30	30
CG.AR.M25L.BN.C.16.*	M25	13.5 ... 20.5	18 ... 27	1.6	72	88	16	44.5	40	40	40
CG.AR.M32.BN.C.16.*	M32	13.5 ... 21	18 ... 27	1.6	71.5	87.5	16	44.5	40	40	40
CG.AR.M32L.BN.C.16.*	M32	18 ... 27	23 ... 33	1.6	76.2	92.2	16	47	43	43	43
CG.AR.M40.BN.C.16.*	M40	23 ... 33	29 ... 41	2	78	94	16	55.5	50	50	50
CG.AR.M50.BN.C.16.*	M50	29 ... 41	35 ... 48	2.5	103.4	94.3	16	64	58	58	58
CG.AR.M63.BN.C.20.*	M63	35 ... 48	42 ... 56	2.5	132	152	20	83	75	75	75

Details and Accessories Metric—Nickel-Plated Brass	Thread size	Mass approx.		Diameter thru-hole [mm]	Nut torques [Nm]			Delivery quantity
Type	**TD**	**Component**	**Packaging unit**	**DT**	**SW1**	**SW2**	**SW3**	
CG.AR.M16.BN.C.16.K01	M16	134 g	174 g	16 ... 16.2	4	35	25	-
CG.AR.M16.BN.C.16.K15	M16	134 g	2.21 kg	16 ... 16.2	4	35	25	15
CG.AR.M20.BN.C.16.K01	M20	139 g	178 g	20 ... 20.2	6	35	25	-
CG.AR.M20.BN.C.16.K15	M20	139 g	2.29 kg	20 ... 20.2	6	35	25	15
CG.AR.M20L.BN.C.16.K01	M20	178 g	231 g	20 ... 20.2	6	45	35	-
CG.AR.M20L.BN.C.16.K15	M20	178 g	2.94 kg	20 ... 20.2	6	45	35	15
CG.AR.M25S.BN.C.16.K01	M25	225 g	293 g	25 ... 25.2	6	35	25	-
CG.AR.M25S.BN.C.16.K10	M25	225 g	2.48 kg	25 ... 25.2	6	35	25	10
CG.AR.M25.BN.C.16.K01	M25	233 g	303 g	25 ... 25.2	6	45	35	-
CG.AR.M25.BN.C.16.K10	M25	233 g	2.56 kg	25 ... 25.2	6	45	35	10
CG.AR.M25L.BN.C.16.K01	M25	243 g	443 g	25 ... 25.2	6	55	30	-
CG.AR.M25L.BN.C.16.K10	M25	243 g	2.67 kg	25 ... 25.2	6	55	30	10
CG.AR.M32.BN.C.16.K01	M32	400 g	472 g	32 ... 32.3	6	55	30	-
CG.AR.M32.BN.C.16.K10	M32	400 g	4.4 kg	32 ... 32.3	6	55	30	10
CG.AR.M32L.BN.C.16.K01	M32	370 g	481 g	32 ... 32.3	6	75	55	-
CG.AR.M32L.BN.C.16.K10	M32	370 g	4.07 kg	32 ... 32.3	6	75	55	10
CG.AR.M40.BN.C.16.K01	M40	644 g	837 g	40 ... 40.3	12	85	65	-
CG.AR.M40.BN.C.16.K05	M40	644 g	3.54 kg	40 ... 40.3	12	85	65	5
CG.AR.M50.BN.C.16.K01	M50	715 g	930 g	50 ... 50.3	18	95	75	-
CG.AR.M50.BN.C.16.K02	M50	715 g	1.57 kg	50 ... 50.3	18	95	75	2
CG.AR.M63.BN.C.20.K01	M63	1.82 kg	2.36 kg	63 ... 63.3	25	105	85	-
CG.AR.M63.BN.C.20.K02	M63	1.82 kg	4 kg	63 ... 63.3	25	105	85	2

*Knn: scope of delivery see table technical data. See individual datasheets for further versions in stainless steel and NPT.
All listed cable glands are also available as single parts with the type designation ‘K1’ at the end.

Cable Glands, Metal, Barrier Glands for Armored Cables (CG.BA.*)

Features

- Cable gland series for armored cables
- Barrier gland
- Nickel-plated brass or stainless steel
- Metric and NPT versions available
- Ex db, Ex eb, and Ex tb certified
- Suitable for operation in Zones 1/21 and 2/22

Function

Type CG.BA metal cable glands are suitable for indoor and outdoor application in Zone 1/21 and 2/22 hazardous areas. They are intended for use with armored cables. A two-part system sealing compound provides reliable protection against explosion transmission through the cables. Typical armors include steel wire armor (SWA), steel wire braided (SWB), steel tape armor (STA), pliable wire armor (PWA) and aluminum wire armor.

Technical Data		
Mechanical specifications	Thread type	metric ISO pitch 1.5 mm or NPT ANSI ASME B1.20.1
	Degree of protection	IP66/IP68
	Mass	see data table
Material	Cable gland	brass nickel-plated or AISI 316 (1.4401) stainless steel
	O-Ring	silicone
	Seal insert	silicone
Ambient conditions	Ambient temperature	–60 ... 100 °C (–76 ... 212 °F)
Data for application in connection with hazardous areas	EU-Type Examination Certificate	CESI 18 ATEX 037 X
	Marking	Ex II 2 GD Ex db IIC Gb, Ex eb IIC Gb, Ex tb IIIC Db
International approvals	IECEx approval	IECEx CES 18.0030X
	CCC approval	2021312313000454
	UKCA approval	CML 22 UKEX 1268X
General information	Scope of delivery	K01 – individual component: Cable gland, epoxy molding compound, pair of gloves, brief instructions Knn – packing unit with multiple components: Cable glands, epoxy molding compound, pair of gloves, brief instructions (1 copy)

For further technical data, please refer to individual datasheets.

Dimensions

1	Gland body basis
2	O-Ring
3	Barrier tube
4	Grounding cone
5	Swivel braid ring
6	Gland body
7	Seal insert
8	Pressure nut
D	Clamping range, cable sheath diameter
D2	Width across corners
H	Length outside enclosure
L	Total length
SW*	Width across flats
TD	Thread size
TL	Thread length
	Barrier details in data tables
CQ	Max. number of cores
DS	Core cross-section, single-core cable
DM	Total core cross-section, multi-core cables
CC	Max. total core cross-section area

See data tables for details.

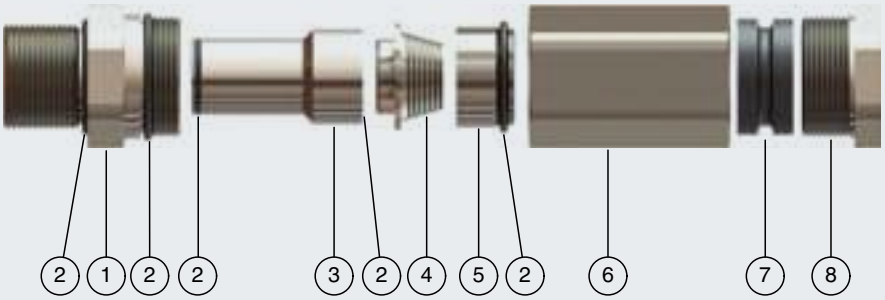

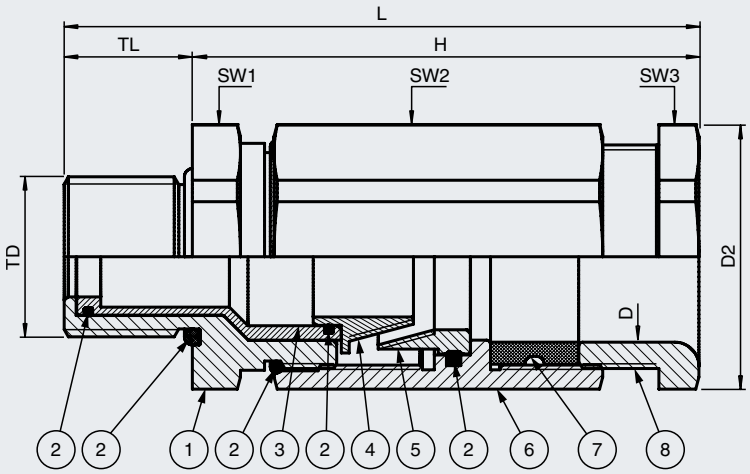

See data tables for details.

Dimensions Metric—Nickel-Plated Brass	Thread size	Clamping range [mm]	Max. armor thickness [mm]	Dimensions [mm]						
Type	**TD**	**D**		**H**	**L**	**TL**	**D2**	**SW1**	**SW2**	**SW3**
CG.BA.M20S.BN.S.16.*	M20	6 ... 13	1.25	61.5	77.5	16	27	25	25	25
CG.BA.M20.BN.S.16.*	M20	8 ... 15	1.25	61.5	77.5	16	27	25	25	25
CG.BA.M20L.BN.S.16.*	M20	13.5 ... 21	1.25	63.2	79.2	16	33	30	30	30
CG.BA.M25S.BN.S.16.*	M25	8 ... 15	1.25	61.5	77.5	16	33	30	25	25
CG.BA.M25.BN.S.16.*	M25	13.5 ... 21	1.25	63.2	79.2	16	33	30	30	30
CG.BA.M25L.BN.S.16.*	M25	18 ... 27	1.6	70.5	86.5	16	44.5	40	40	40
CG.BA.M32.BN.S.16.*	M32	18 ... 27	1.6	70.5	86.5	16	44.5	40	40	40
CG.BA.M32L.BN.S.16.*	M32	23 ... 33	1.6	72.3	88.3	16	47	43	43	43
CG.BA.M40S.BN.S.16.*	M40	23 ... 33	1.6	72.3	88.3	16	50	45	43	43
CG.BA.M40.BN.S.16.*	M40	29 ... 40	2	80.5	96.5	16	55.5	50	50	50
CG.BA.M50S.BN.S.16.*	M50	29 ... 40	2	80.5	96.5	16	61	55	50	50
CG.BA.M50.BN.S.16.*	M50	35 ... 48	2.5	88.3	104.3	16	64	58	58	58
CG.BA.M63S.BN.S.20.*	M63	35 ... 48	2.5	88.3	104.3	16	64	58	58	58
CG.BA.M63.BN.S.20.*	M63	42 ... 56	2.5	117.7	137.7	20	83	75	75	75
CG.BA.M75S.BN.S.20.*	M75	42 ... 56	2.5	117.7	137.7	20	89	80	75	75
CG.BA.M75.BN.S.20.*	M75	54 ... 70	3.2	124.1	144.1	20	110.5	100	100	100

Details and Accessories Metric—Nickel-Plated Brass	Thread size	Mass approx.		Barrier details				Nut torques [Nm]			Delivery quantity
Type	**TD**	**Compo-nent**	**Packaging unit**	**CQ max. qty.**	**DS [mm]**	**DM [mm]**	**CC max. [mm²]**	**SW1**	**SW2**	**SW3**	
CG.BA.M20S.BN.S.16.K01	M20	156 g	258 g	9	1.5 ... 9.5	1.5 ... 9.5	70.9	60	60	30	-
CG.BA.M20S.BN.S.16.K15	M20	201 g	4.82 kg	9	1.5 ... 9.5	1.5 ... 9.5	70.9	60	60	30	15
CG.BA.M20.BN.S.16.K01	M20	176 g	233 g	9	1.5 ... 9.5	1.5 ... 9.5	70.9	60	60	25	-
CG.BA.M20.BN.S.16.K15	M20	176 g	3.45 kg	9	1.5 ... 9.5	1.5 ... 9.5	70.9	60	60	25	15
CG.BA.M20L.BN.S.16.K01	M20	226 g	284 g	9	1.5 ... 9.5	1.5 ... 9.5	70.9	60	60	35	-
CG.BA.M20L.BN.S.16.K15	M20	226 g	4.2 kg	9	1.5 ... 9.5	1.5 ... 9.5	70.9	60	60	35	15
CG.BA.M25S.BN.S.16.K01	M25	213 g	270 g	9	1.5 ... 9.5	1.5 ... 9.5	70.9	65	60	25	-
CG.BA.M25S.BN.S.16.K10	M25	213 g	2.75 kg	9	1.5 ... 9.5	1.5 ... 9.5	70.9	65	60	25	10
CG.BA.M25.BN.S.16.K01	M25	250 g	307 g	9	1.5 ... 9.5	1.5 ... 9.5	70.9	65	60	35	-
CG.BA.M25.BN.S.16.K10	M25	250 g	3.12 kg	9	1.5 ... 9.5	1.5 ... 9.5	70.9	65	60	35	10
CG.BA.M25L.BN.S.16.K01	M25	431 g	488 g	22	1.5 ... 15	1.5 ... 15	176.7	65	65	30	-
CG.BA.M25L.BN.S.16.K10	M25	431 g	4.93 kg	22	1.5 ... 15	1.5 ... 15	176.7	65	65	30	10
CG.BA.M32.BN.S.16.K01	M32	473 g	530 g	22	1.5 ... 15	1.5 ... 15	176.7	70	70	30	-
CG.BA.M32.BN.S.16.K10	M32	473 g	5.35 kg	22	1.5 ... 15	1.5 ... 15	176.7	70	70	30	10
CG.BA.M32L.BN.S.16.K01	M32	438 g	520 g	36	1.5 ... 21.5	1.5 ... 21.5	363.1	70	70	55	-
CG.BA.M32L.BN.S.16.K10	M32	438 g	5.25 kg	36	1.5 ... 21.5	1.5 ... 21.5	363.1	70	70	55	10
CG.BA.M40S.BN.S.16.K01	M40	507 g	594 g	36	1.5 ... 21.5	1.5 ... 21.5	363.1	80	70	55	-
CG.BA.M40S.BN.S.16.K05	M40	507 g	3.09 kg	36	1.5 ... 21.5	1.5 ... 21.5	363.1	80	70	55	5
CG.BA.M40.BN.S.16.K01	M40	574 g	586 g	55	1.5 ... 29	1.5 ... 29	660.5	80	80	65	-
CG.BA.M40.BN.S.16.K05	M40	574 g	3.55 kg	55	1.5 ... 29	1.5 ... 29	660.5	80	80	65	5
CG.BA.M50S.BN.S.16.K01	M50	693 g	805 g	55	1.5 ... 29	1.5 ... 29	660.5	90	80	65	-
CG.BA.M50S.BN.S.16.K02	M50	693 g	1.81 kg	55	1.5 ... 29	1.5 ... 29	660.5	90	80	65	2
CG.BA.M50.BN.S.16.K01	M50	754 g	891 g	75	1.5 ... 37	1.5 ... 37	1075.2	90	90	75	-
CG.BA.M50.BN.S.16.K02	M50	754 g	1.98 kg	75	1.5 ... 37	1.5 ... 37	1075.2	90	90	75	2
CG.BA.M63S.BN.S.20.K01	M63	1.03 kg	1.17 kg	75	1.5 ... 37	1.5 ... 37	1075.2	110	90	75	-
CG.BA.M63S.BN.S.20.K02	M63	1.03 kg	2.54 kg	75	1.5 ... 37	1.5 ... 37	1075.2	110	90	75	2
CG.BA.M63.BN.S.20.K01	M63	2.03 kg	2.29 kg	99	1.5 ... 46	1.5 ... 46	1661.9	110	110	85	-
CG.BA.M63.BN.S.20.K02	M63	2.03 kg	4.78 kg	99	1.5 ... 46	1.5 ... 46	1661.9	110	110	85	2
CG.BA.M75S.BN.S.20.K01	M75	2.3 kg	2.57 kg	99	1.5 ... 46	1.5 ... 46	1661.9	120	110	85	-
CG.BA.M75S.BN.S.20.K02	M75	2.3 kg	5.33 kg	99	1.5 ... 46	1.5 ... 46	1661.9	120	110	85	2
CG.BA.M75.BN.S.20.K01	M75	3.76 kg	4.09 kg	129	1.5 ... 58	1.5 ... 58	2642.1	120	120	150	-
CG.BA.M75.BN.S.20.K02	M75	3.76 kg	8.38 kg	129	1.5 ... 58	1.5 ... 58	2642.1	120	120	150	2

*Knn: scope of delivery see table technical data. See individual datasheets for further versions in stainless steel and NPT.
All listed cable glands are also available as single parts with the type designation 'K1' at the end.

Cable Glands, Plastic (CG.P*DS.*.PA.*)

Features

- Cable gland series for non-armored cables
- High-impact-resistant polyamide material
- Suitable for operation in Zones 1/21 and 2/22
- Ex e and Ex tb certified
- Very large clamping range due to double sealing inserts
- Versions with blue marking for use with Ex i circuits
- Full impact resistance of 7 J at -40 °C according to IEC/EN 60079-0 for the full range without limitations

Function

CG.P*DS plastic cable glands are designed for Ex e protection in accordance with IEC/EN 60079-0 and IEC/EN 60079-7 for use in Zone 1/21 and 2/22 hazardous areas with non-armored cables. They are made of special impact-resistant polyamide and offer a variety of clamping ranges and thread lengths. Versions with blue marking are available for identification of Ex i circuits.

Technical Data		
Mechanical specifications	Thread type	metric ISO pitch 1.5 mm
	Degree of protection	IP66/IP68
	Mass	see data table
Material	Cable gland	high impact-resistant polyamide
	Seal insert	chloroprene/neoprene or silicone
	Washer gasket	flat chloroprene gasket
Ambient conditions	Ambient temperature	chloroprene seal: –40 ... 70 °C (–40 ... 158 °F) silicone seal: –60 ... 70 °C (–76 ... 158 °F) sealing plugs: –60 ... 70 °C (–76 ... 158 °F)
Data for application in connection with hazardous areas	EU-Type Examination Certificate	IMQ 15 ATEX 006 X
	Marking	Ex II 2 GD Ex e IIC Gb, Ex tb IIIC Db
International approvals	IECEx approval	IECEx IMQ 15.0001X
	CCC approval	2021312313000450
	UKCA approval	CML 21 UKEX 31379X
	INMETRO approval	DNV 20.0030 X
General information	Scope of delivery	Knn – packing unit with multiple components: Cable glands, brief instructions (1 copy)

For further technical data, please refer to individual datasheets.

Dimensions

1	Gland body basis
2	O-Ring
3	Barrier tube
4	Grounding cone
5	Swivel braid ring
6	Gland body
7	Seal insert
8	Pressure nut
D	Clamping range, cable sheath diameter
D2	Width across corners
H	Length outside enclosure
L	Total length
SW*	Width across flats
TD	Thread size
TL	Thread length
	Barrier details in data tables
CQ	Max. number of cores
DS	Core cross-section, single-core cable
DM	Total core cross-section, multi-core cables
CC	Max. total core cross-section area

See data tables for details.

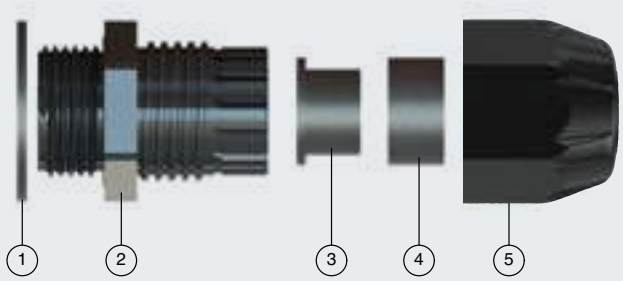

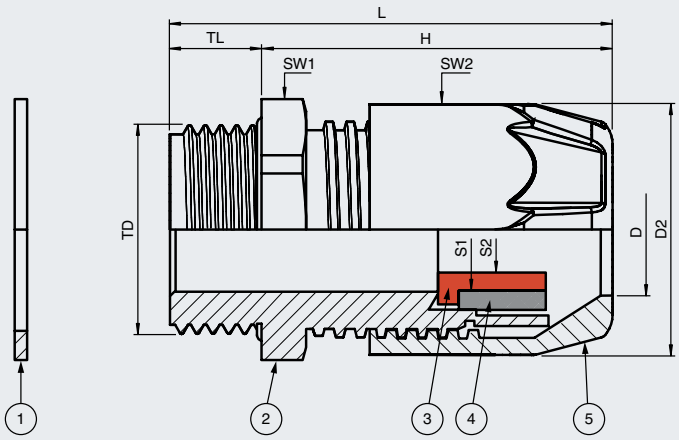

Dimensions Metric—Nickel-Plated Brass	Thread size	Clamping range [mm] seal insert combinations			Dimensions [mm]					
Type	**TD**	**D**	**S1+S2**	**S1**	**H**	**L**	**TL**	**D2**	**SW1**	**SW2**
CG.PEDS1.M12.PA.C.10.K50	M12	3 ... 6.5	3 ... 4	4 ... 6.5	30.3	40.3	10	17	15	15
CG.PEDS1.M12.PA.C.15.K50	M12	3 ... 6.5	3 ... 4	4 ... 6.5	30.3	45.3	15	17	15	15
CG.PEDS1.M16S.PA.C.10.K50	M16	4 ... 8	4 ... 5	5 ... 8	33.6	43.6	10	21.7	19	19
CG.PEDS1.M16S.PA.C.15.K50	M16	4 ... 8	4 ... 5	5 ... 8	33.6	48.2	15	21.7	19	19
CG.PEDS1.M16.PA.C.15.K50	M16	4 ... 10	4 ... 6	6 ... 10	37.2	47.2	15	25	22	22
CG.PEDS1.M20.PA.C.10.K50	M20	6 ... 12	6 ... 7.5	7.5 ... 12	37.8	47.8	10	27	24	24
CG.PEDS1.M20.PA.C.15.K50	M20	6 ... 12	6 ... 7.5	7.5 ... 12	37.8	52.4	15	27	24	24
CG.PEDS1.M20XL.PA.C.15.K50	M20	8 ... 14	8 ... 11	11 ... 14	37	52	15	30.9	27	27
CG.PEDS1.M25.PA.C.10.K25	M25	9 ... 17	9 ... 13	13 ... 17	42.2	47.7	10	32.5	29	29
CG.PEDS1.M25.PA.C.15.K25	M25	9 ... 17	9 ... 13	13 ... 17	42.2	47.7	15	32.5	29	29
CG.PEDS1.M25L.PA.C.15.K25	M25	10 ... 18	10 ... 13	13 ... 18	43.6	58.6	15	37.2	33	33
CG.PEDS1.M32.PA.C.10.K20	M32	12 ... 21	12 ... 16	16 ... 21	47.3	57.3	10	41	36	36
CG.PEDS1.M32.PA.C.15.K20	M32	12 ... 21	12 ... 16	16 ... 21	47.3	62.3	15	41	36	36
CG.PEDS1.M32L.PA.C.15.K20	M32	14 ... 25	14 ... 20	20 ... 25	48.7	63.7	15	47.1	42	42
CG.PEDS1.M40.PA.C.10.K10	M40	17 ... 28	17 ... 21	21 ... 28	52.4	62.4	10	52.4	46	46
CG.PEDS1.M40.PA.C.15.K10	M40	17 ... 28	17 ... 21	21 ... 28	52.4	67.4	15	52.4	46	46
CG.PEDS1.M50.PA.C.18.K05	M50	22 ... 38	22 ... 31	31 ... 38	60.1	78.1	18	67.8	60	60
CG.PEDS1.M63.PA.C.18.K05	M63	28 ... 44	28 ... 35	35 ... 44	60.4	78.4	18	72.4	65	65

Your automation, our passion.

Explosion Protection

- Intrinsic Safety Barriers
- Signal Conditioners
- FieldConnex® Fieldbus Infrastructure
- Remote I/O Systems
- Electrical Explosion Protection Equipment
- Purge and Pressurization Systems
- HMI Systems
- Mobile Computing and Communications
- HART Interface Solutions
- Surge Protection
- Wireless Solutions
- Level Measurement

Industrial Sensors

- Proximity Sensors
- Photoelectric Sensors
- Industrial Vision
- Ultrasonic Sensors
- Rotary Encoders
- Positioning Systems
- Inclination and Acceleration Sensors
- Vibration Monitoring
- Industrial Ethernet
- AS-Interface
- IO-Link
- Identification Systems
- Displays and Signal Processing
- Connectivity

www.pepperl-fuchs.com

Subject to modifications · © Pepperl+Fuchs
Printed in Germany · Part. No. 70100121 05/23 01 · public

Pepperl+Fuchs Quality
Download our latest policy here:

www.pepperl-fuchs.com/quality

PEPPERL+FUCHS